Fourth International Meeting on Wind Turbine Noise

Rome Italy 12-14 April 2011

Acoustic analysis of a wind turbine with vertical axis under "In-situ" in the urban area.

Jacek SZULCZYK
Czeslaw CEMPEL, Zdzislaw GOLEC

Poznan University of Technology, Institute of Applied Mechanics
Department Vibroacoustics and Bio-Dynamic Systems
tel: +48 61 665 2390, fax: +48 61 665 2307
e-mail: jacek.szulczyk@doctorate.put.poznan.pl
e-mail: czeslaw.cempel@put.poznan.pl e-mail: zdzislaw.golec@put.poznan.pl

ABSTRACT

The paper shows the results of acoustic tests of a wind turbine vertical axis made under "In-situ". The test object is a turbine with the power of 400 W and the trade name SG-03 mounted roofing building for livestock farming area. The study consisted of measuring the noise spectrum of sound ranging from 1 Hz - 20 kHz for typical conditions of turbine operation, background noise and signal frequency analysis of sound levels by determining the corrected frequency characteristics of A, C, G. The methodology of research based on the guidelines of ISO 61400-11 and general test methods of acoustic point sources.

INTRODUCTION

The objective was to noise tests to determine basic parameters of the acoustic wind turbine with vertical axis (VAWT) mounted in the urban area with the power of 400W.

Figure 1. General view of the test turbine SG-03

The object of research was the Savonius-type turbine under the trade name SG-03, and the elements composing the structure are sheets made of plastic with dimensions of 1.5 meters in height and 0.9 meter in diameter, the shaft has been placed in tapered roller bearings in the upper and bottom of the cage support structure made of square section steel profile 60 x 60 x 3, the flexible coupling connecting the shaft with a slow rotating generator is latched rigidly to the structure of a windmill.To maintain sufficient stability to the roof of a turbine mounted livestock building it into a specially designed wooden base, which meant that the total height of the windmill was 2.7 meters above the surface of the roof.

LOCATION OF MEASUREMENT POINTS

Acoustic tests relied on the analysis of linear sound spectrum in the range from 1 Hz - 20 kHz for the two locations of the measuring microphone, ie, perpendicular and parallel to the current direction of wind blowing. Such locations were selected based on previous studies of similar objects [Szulczyk2009], where it was shown that the proper identification of the acoustic properties of turbines VAWT two sites are enough data points. This is due to the nature of the sound source which is characterized by directionality in relation to wind direction. Microphone location perpendicular to the direction of the wind allows more precise analysis of acoustic properties of the turbine as opposed to a location parallel to the direction of the wind, where in certain ranges of wind velocity microphone is located in the shadow of a windy and acoustic shadow.

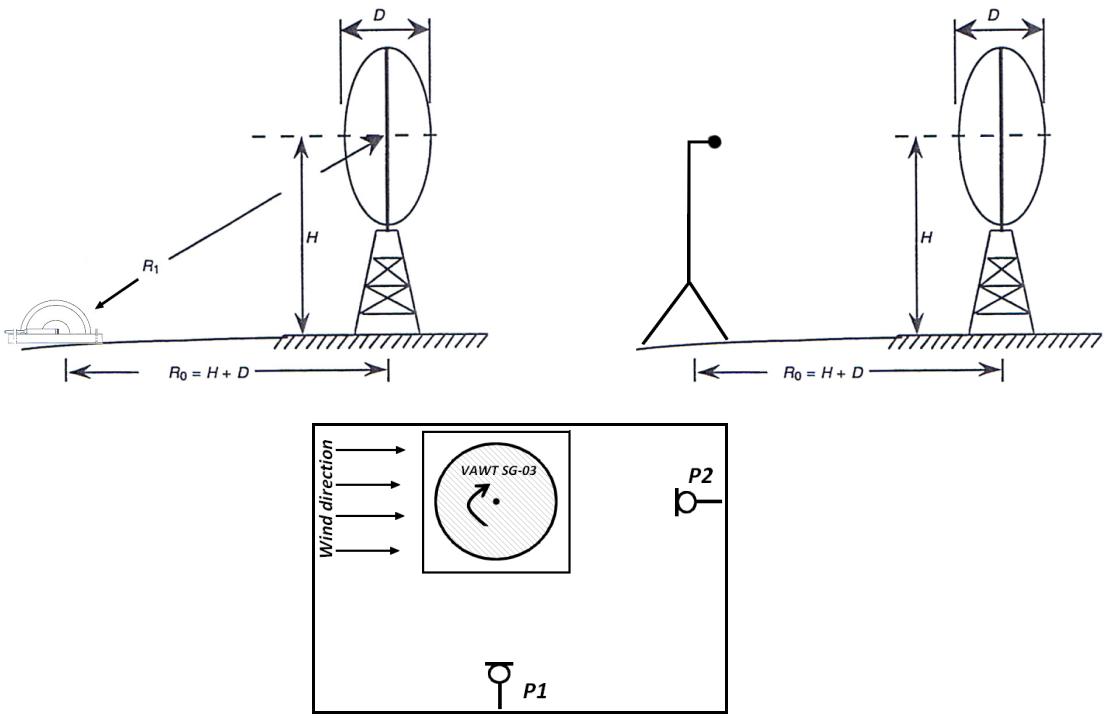

Figure 2 Location of the microphone for measuring point: plate and tripod.

Distance measurement points was determined on the basis of the PN-EN 61400-11:2004 + A1 from July 2006, it is just the formula R0 to be fixed first:

$$R_0 = H + \frac{D}{2}\ [m] \tag{1}$$

where:
H-height of the tower, D-diameter rotor

Acoustic analysis was performed for the location of the turbine disc reflecting the microphone in accordance with ISO 61400-11:2004 + A1 from July 2006 and measured on a tripod in the middle of wings of a windmill.

Figure 3. View the location of the measuring microphone: plate and the stand.

METHODS

Acoustic tests consisted of setting the sound level in the frequency range set from 1 Hz to 20 kHz without the use of the frequency. The duration of each sample measurement was 1 min, and the same measurement for a given average wind speed was repeated 5 - fold. Measurement of background noise followed after stopping the turbines for the same location of the measuring point. Levels for individual components of the spectrum amplitude - frequency determined by subtracting the log-acoustic signal of the turbine and the acoustic signal background noise. If the sound level of the test turbine operation was lower than the acoustic background noise subtraction, there were no levels of sound and accepted in the acoustic signal of the turbine. Tests were performed using a digital audio analyzer SVAN 912 AE, who before taking measurements and after been calibrated to the sound level 94 dB for 1000 Hz. The conditions were recorded weather station digital weather Ventage Pro 2, which was placed on a tripod with a height of 4 meters.

TEST RESULTS

Below is a sample of working spectral images of a wind turbine vertical axis of rotation of the SG-03, with the power of 400 watts for a wind speed of 6 m / s.

Spectrum amplitude - frequency sound levels present in succession for the correction of frequency A, C and G, which was shown in each case together with the line level obtained during the tests. Results presented below were recorded on a tripod at the measuring point P1.

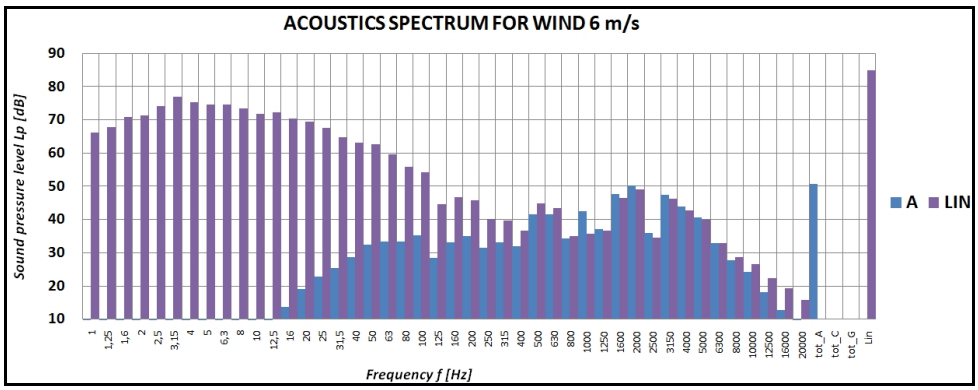

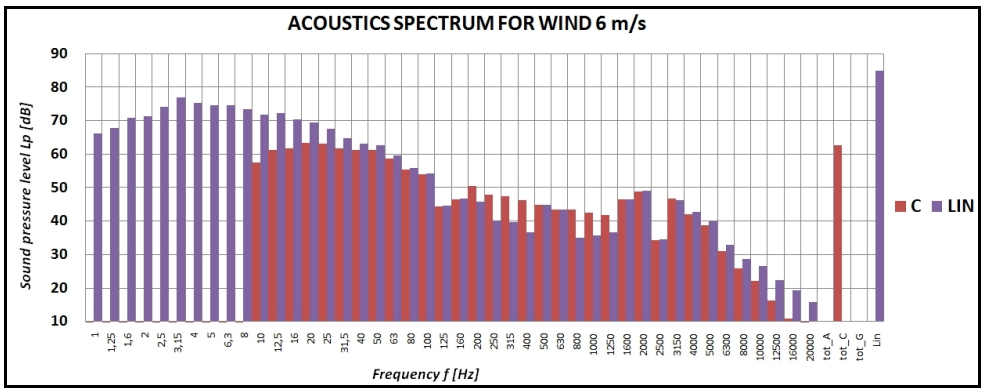

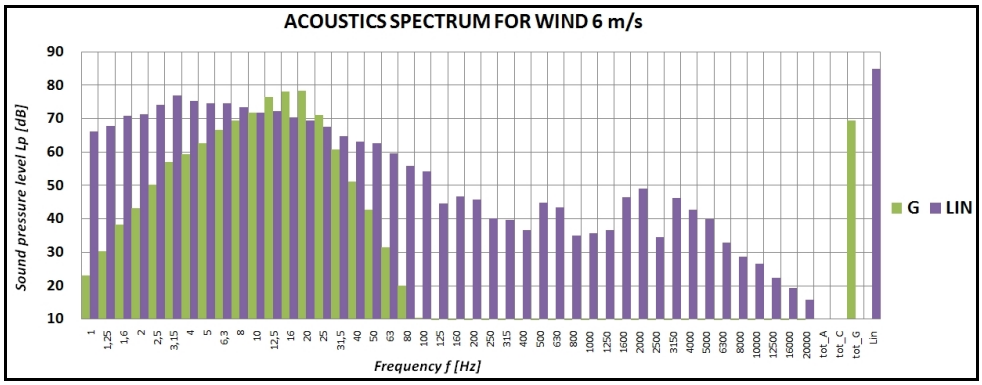

Figure 4. Sound spectrum for the measurement point P1

The graphs showing summary statement of equivalent sound levels for different wind speeds. The results show the noise for the tests carried out on a tripod and plate measuring system.

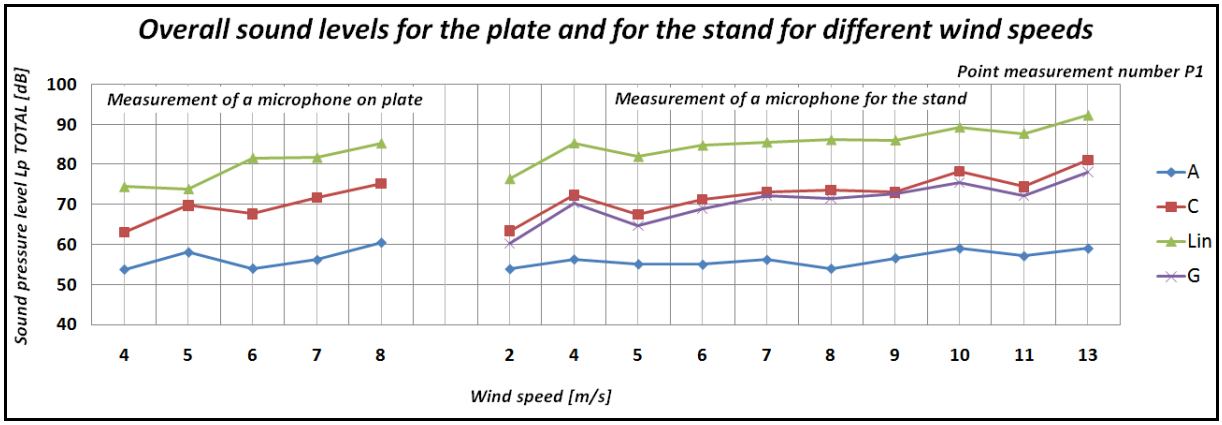

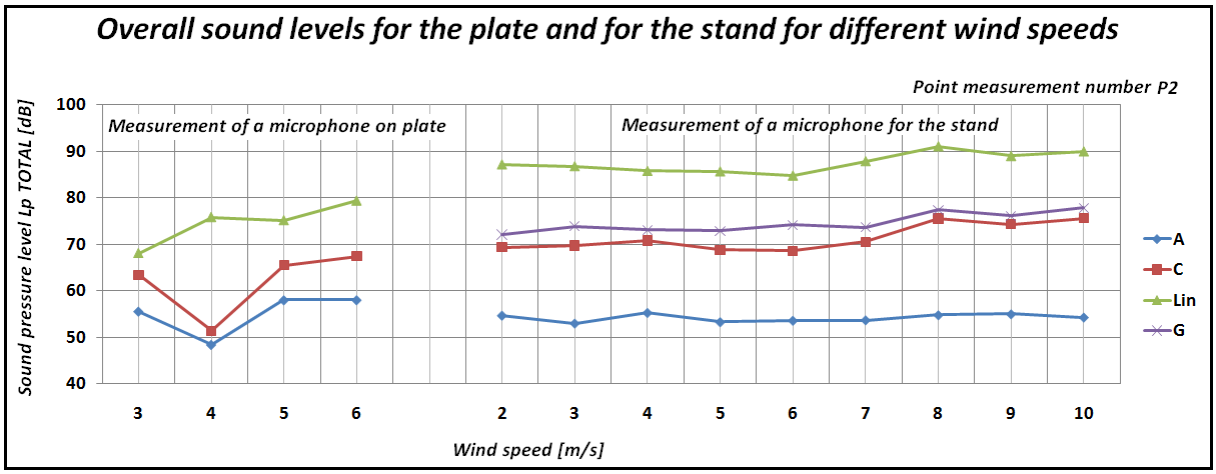

SUMMARY

The paper shows the results of acoustic conditions, "In-situ wind turbine with vertical axis of rotation. Were compared with measured sound levels on a tripod and plate measuring system. Test results are presented in the form of acoustic spectra for the sample at 6 m / s and the measuring point P1. Analyzing the results of research can be noted that sound levels obtained from tests carried out on a tripod and on the disc do not differ significantly from each other, especially for P1 and at speeds exceeding 5 m / s. Small size wind turbine meant that the distance from the source of the measuring point was low, which further resulted in no decrease in sound level of a wind turbine for higher wind speed as it goes for the classic, large-scale wind turbines. The analysis also shows that sound levels corrected frequency response characteristics of C and G have similar values, and criteria for assessing levels are significantly different from each other. May offer a new parameterization of the impact of wind turbines with a vertical axis in urban areas. Further lines of research should be aimed at verifying the sound levels obtained on a tripod and record the measurement for higher wind speeds and for the subsequent wind turbines vertical axis.

LITERATURE

1. Golec, M., Golec Z., Cempel C., Wind Turbine Noise during operation VESTAS V80 Wind Turbine Noise 2005, Berlin, Germany, 2005.
2. Szulczyk J., Cempel C., "Vertical Axis Wind Turbine Vibroacoustics" SYMPOSIUM XXIII - VIBRATIONS IN PHYSICAL SYSTEMS - Classifieds - Będlewo 2008.
3. Szulczyk J., Cempel C. "acoustic phenomena of wind turbines with a vertical axis" Open Seminar of Vibroacoustics I biodynamics Systems, Poznan, Poland 06.01.2009.
4. Szulczyk J., Cempel C., A row of wind turbines in the field of infrasound, Environmental Monitoring, May 2010 (conference)
5. Szulczyk J., Cempel C., Analysis of sound propagation simulation of wind farms, Environmental Monitoring, May 2010 (conference)
6. Timouchev S., CFD-CAA Study of Generic Savonius Rotor Wind Turbine, Wind Turbine Noise 2005, Berlin, 2005.
7. S. Watson, D. Infield, Barton J., Wylie S., Modeling of the Performance of a Building - Mounted Ducted Wind Turbine, Journal of Phisics, 2007.
8. Wegner S., Bareiss R., Guidati G. Wind Turbine Noise, Springer, Berlin, 1996.
9. G. van Bussel, Mertens S., Small wind turbines for the built environment, EACWE4 - The Fourth European & African Conference on Wind Engineering, Prague, 11-15 July, 2005
10. Polish Standard PN-EN 61400-11, Wind turbine generator systems, Part 11: Procedures for measuring noise.
11. Polish standard PN-EN-01341, Environmental Noise. Methods of measurement and evaluation of industrial noise.