Fourth International Meeting on Wind Turbine Noise

Rome Italy 12-14 April 2011

Test bed for acoustic assessment of small wind turbine drive-trains

Ganesh Raman, Mahesh Krishnamurthy, Rakesh C Ramachandran, Clement Pereira, Xiaodong Shi and Yong Jiang
Illinois Institute of Technology, Chicago, IL, USA.
raman@iit.edu, kmahesh@ece.iit.edu

Martin Price and Matthew Arnold
Viryd Technologies, Austin, TX, USA

Abstract

This paper describes a test facility for acoustic assessment of small wind turbine drive trains. The wind turbine drive train chosen for our facility was that of a 8 kW horizontal axis wind turbine (Viryd 8000). The facility has a drive side and a turbine side. On the drive side, a drive motor is connected through a gearbox to a flywheel that compensates for the absence of the blades. The turbine side includes the entire driveline of the wind turbine. The system can simulate inflow wind speed and turbulence. The system also includes accelerometers and torque sensors. For the acoustic assessment both single microphones and an array of 24 microphones were used. Various beamforming algorithms were used for source localization. These include classical beamforming (FDBF), deconvolution approaches for mapping acoustic sources (DAMAS2), CLEAN based on source coherence (CLSC) and TIDY. The array was calibrated and validated for both coherent and incoherent sources. Acoustic measurements from the fully functional drive train test facility are presented for a few operating conditions. Further tests in the facility will be conducted to assess wind turbine drive train acoustics and vibration for various wind velocities and turbulence levels. The facility will also be used to develop techniques for the minimization of sound and vibration from small wind turbine drive trains.

Introduction

Wind turbines generate both aerodynamic and mechanical noise from its various components. Aerodynamic noise includes low-frequency sound, in-flow turbulence sound, and airfoil self- noise. The cylindrical tower can produce additional noise due to vortex shedding in various regimes. Mechanical sources include sound from the gearbox, generator, yaw drives, cooling fans, and hydraulics. Even though wind turbines have become much quieter over the years, their sound is still important because noise is a measure of the inefficiency of a machine. Clearly, excessive noise indicates that energy is being wasted. Mechanical sounds originate from the relative motion of mechanical components and dynamic response among them. Examples of mechanical sound sources include the gear box that houses gears that connect the low speed shaft to the high speed shaft. Typically the rotor blade rotations occur at 30-60 rotations per minute (rpm). These rotations are transmitted

to the high speed shaft at 1000-1800 rpm and during the process noise is produced by the gears and the high speed shaft.

The work presented in this paper represents a collaborative multidisciplinary effort between the Electrical and Computer Engineering (ECE) department and the Mechanical, Materials and Aerospace (MMAE) department at the Illinois Institute of Technology, IL. In this paper we describe the test bed that was developed for the acoustic assessment of the drive trains of small wind turbines. The drive side of the facility can simulate various wind speeds and turbulence levels whereas the turbine side includes the entire driveline of the wind turbine. The acoustic measurements presented in this paper include both single microphone and phased array measurements that can localize sources. The eventual goal of this effort is to develop technologies to minimize sound and vibration from wind turbine drive trains.

The work encompasses both a research component as well as an educational component intended to focus on work force development for the next generation of engineers.

Experimental Details

Drive Train

The wind turbine drive train chosen was that of a Viryd 8000 horizontal axis wind turbine (see Fig. 1(a)). The wind turbine incorporates a proprietary continuously variable planetary (CVP) gearbox that provides the benefits of using a grid tied induction generator without the costly and unreliable inverter. This one of its kind wind turbine drive test bed facility houses two sides: a drive side and the turbine side. On the drive side, a drive motor is attached through a gear box to an inertia wheel that compensates for the absence of blades. The drive side also houses a torque transducer. The turbine side of the test bed contains the entire turbine driveline, with the addition of a torque transducer. The turbine software simulates the system response to input wind speed and power similar to that for a production model. The drive side software controls the turbine side by feeding it these inputs, and monitoring its performance and safety. The turbine side can be manipulated to run as a production turbine or as a multi-purpose research test bed. Some of the important software parameters are shown in Table 1. One of the unique features of this test facility is that, different scenarios of realistic operating conditions can be simulated from torque values derived from an analytical model developed by Viryd. In the simulation mode, the user can input a value of wind speed either by a slider input or an input file. As the turbine side changes rotor speed to optimize the power at that given wind speed, the rotor speed and wind speed are used to calculate the amount of input torque required from the drive motor in open loop control. There are also various sensors such as accelerometers and torque sensors to monitor the system safety and performance. Speed and torque are measured at low speed shaft torque transducer on the drive side. On the turbine side, torque and speed are also measured to calculate mechanical power going into the generator. Vibration can be measured at two locations on the test stand using accelerometers on the turbine side. The temperature of the system is also monitored at four different locations and the lube pressure is monitored using pressure transducers.

Phased Array and Beamforming Algorithms

Various beamforming algorithms have been developed over the years (see Ref [1] – [5]). General aspects of measurement of noise from wind turbines are covered iin Refs [6,7]. The very first step after acquiring data from the phased array system for every beamforming algorithm considered is the computation of a cross spectral matrix (CSM). The pressure time series of each microphone is divided into blocks and the FFT of each block is computed after applying a suitable spectral window. Then each element of the CSM is calculated via sample averaging. Since the locations of the sources are unknown in practice, a scanning grid that covers a region of interest with a certain resolution is formed and every point of this grid is considered as a potential source whose corresponding sound pressure level at the array center is estimated. This results in a beam forming map representing the acoustic source distribution in the region of interest. DAMAS attempts to estimate the true signal power from the contaminated DAS results by constructing a linear system of equations that relate the DAS estimates at every scanning point to the signal powers at every scanning point. It utilizes the iterative Gauss-Seidel method. A potential drawback of this is computation time. DAMAS2 solves this problem by calculating the point spread function only once and using the same for all the points in the scanning grid. Another widely used method is the CLEAN-SC which iteratively builds up the beamform maps corresponding to the dominant sources using the previously estimated signal powers. TIDY is philosophically similar to CLEAN-SC, but it works in the time domain using the cross correlation matrix (CCM) instead of the frequency domain with CSM.

The use of phased arrays to measure wind turbine noise is not new (see Oerlemans et al. [5]). Our goal in this paper is to describe the creation of a small wind turbine drive train facility for acoustic performance evaluation using a compact phased array that employs sophisticated beamforming algorithms.

Calibration of Phased Array

The calibration experimental setup consisted of three 4 ohm dual cone speaker with a maximum power of 60 W connected to a dedicated amplifier which received input from a white noise generator. The speakers were mounted on a rectangular frame support which had 21 different mounting locations each separated by a distance of one inch (see Fig. 1(b)). One speaker was mounted at the center most location on the frame, referred to as the 0th position. The other two speakers were mounted on the frame at a distance of 9 inches, both to the left and right of the 0th position, and the setup was referred to as 9_0_9. The amplitude of the speakers were individually controlled by dedicated amplifiers. Before the experiments were conducted three different amplitude levels were selected, a low amplitude (69-71 dB), one mid amplitude (75-77 dB) and a high amplitude (82-84 dB). For ease of reference these three amplitude cases were assigned a number; low amplitude case- ‘2’, mid amplitude case- ‘4’ and high amplitude case- ‘6’. The speaker switched off case was assigned a ‘0’. For example, if the center speaker was fed with high amplitude input and the other two speakers were switched off then the configuration was referred to as 9.0_0.6_9.0. Similarly if the right and left speaker were fed with high amplitude input and the center one was switched off then it was referred to as 9.6_0.0_9.6. This nomenclature will be used throughout the paper. A Coherent source scenario was

created by feeding the three amplifiers with input from the same white noise generator whereas three different white noise generators were used to feed the amplifiers in the incoherent case. OptiNav's 24 microphone array system with integral preamps and a built-in camera was used for the experiments (see Fig. 1(c)). The signal from the microphone array is acquired by an A/D converter which has 24 I/O audio interfaces. A MAGMA express box handles the task of interfacing the PCI 424 card to the computer. A USB cable connects the camera to a USB port on the computer. The data acquired from the microphone array was then processed through four different beamforming algorithms namely the Frequency Domain Beamforming (FDBF), DAMAS (DMS2), CLEAN-SC (CLSC) and TIDY. A single 0.25" B&K 4939 microphone with a flat response from 1 Hz - 100 kHz was used for acquiring the acoustic data for comparing the results with that of the microphone array. The microphone was positioned such that it was located exactly at the center of the microphone array. The calibration of the microphone was done using a piston phone which emits sound at 250 Hz at an amplitude of 124 dB.

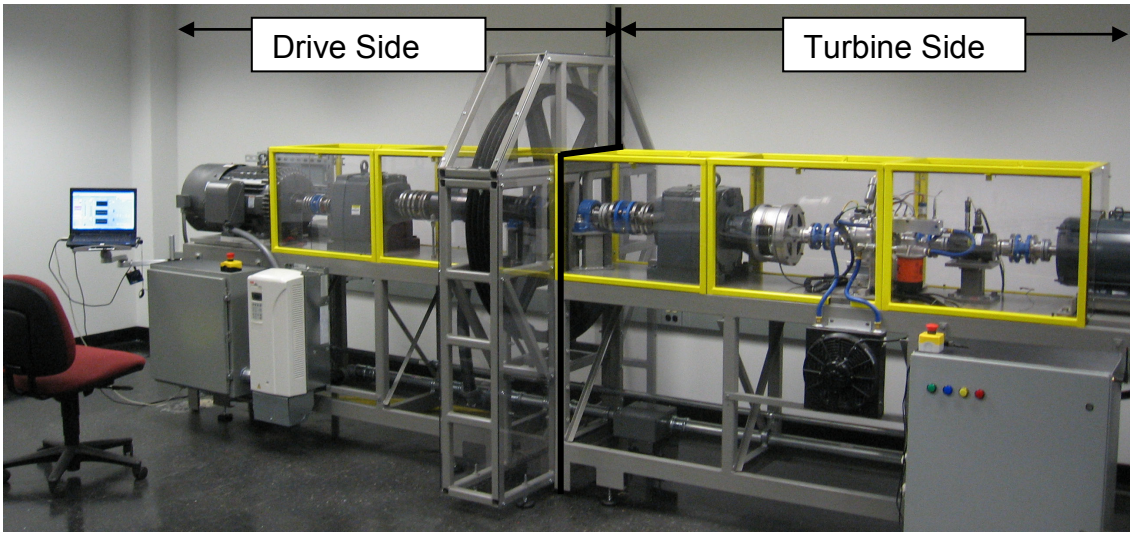

(a)

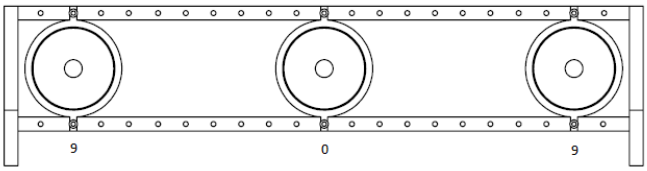

(b)

(c)

Figure 1. Schematic of : (a) Viryd 8000 horizontal axis wind turbine drive train test facility; (b) the speaker arranged on the rectangular frame support at the 9_0_9 position and (c) the microphone array.

Table 1. Software parameters for the turbine software.

Cut In Wind Speed	5.0 m/s
Cut Out Wind Speed (Low)	4.0 m/s
Cut Out Wind Speed (High)	25 m/s
Power Regulation	6000 Watts

Results and Discussion

We begin by using synthetic sound sources from small speakers to evaluate the phased array. Various beamforming algorithms are considered for the evaluation. The results of the 9.0_0.6_9.0 case are shown in Fig. 2(a), 2(b) and 2(c). Fig. 2(a) shows the beamform map of narrow band frequency 972.5-1028.3 Hz. We observe that even though FDBF and DMS2 locate the source they fail to produce a clean map, whereas the CLSC and TIDY locate the source close to the center of the speaker and also produce a clean map of the source. As we increase the frequency band to 2174.6-2299.3 Hz we observe that all the algorithms produce a cleaner map (see Fig. 2(b)). A similar trend is observed as we increase the narrowband frequency to the range from 5777-6120.6 Hz. For all the above beamform maps the dynamic range was set to 5 dB with the upper limit as 69.5, 87 and 82 dB respectively. In order to check the amplitude values, the beamform amplitude values were compared with that of calibrated single microphone values. These values are shown in Table 2. We observe that the integral amplitude values of the FDBF match closely with the integral values of the single microphone value. The peak amplitude values of the CLSC are close to the peak amplitude values of the single microphone. The rest of the amplitude values differ from the single microphone values in the order of 4 to 5 dB.

Table 2. Comparison of beamform amplitude values with the calibrated single microphone values.

Position	Frequency	Single Microphone		Microphone Array		BF-Algorithm
	(Hz)	Peak (dB)	Integral (dB)	Peak (dB)	Integral (dB)	
9.0_9.2_9.0	2174-2299	64.33	69.96	67.3	70.4	FDBF
				68.6	66.7	TIDY
				65.0	65.6	CLSC
				67.8	68.1	DMS2
9.0_9.4_9.0	2174-2299	77.95	83.35	80.7	83.4	FDBF
				81.2	79.9	TIDY

				79.0	79.0	CLSC
				81.2	81.4	DMS2
9.0_9.6_9.0	2174-2299	82.8	88.53	87.4	90.1	FDBF
				87.1	86.6	TIDY
				85.7	85.7	CLSC
				87.9	88.1	DMS2

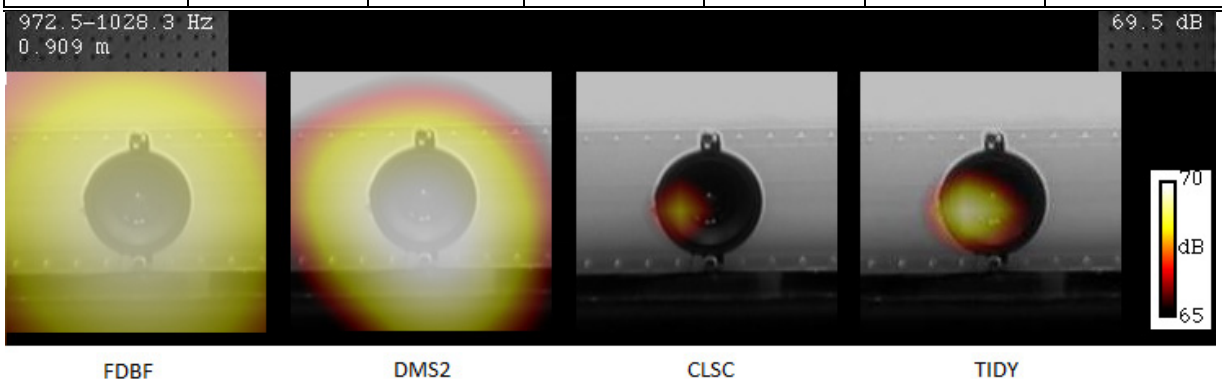

(a)

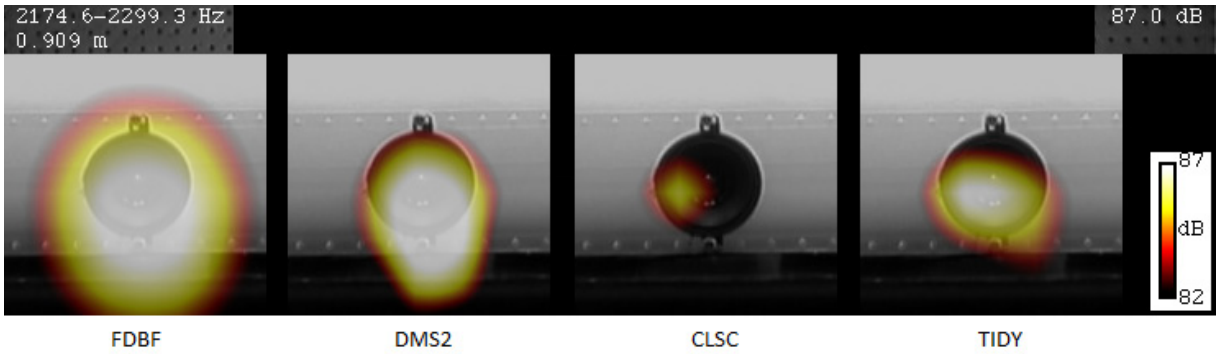

(b)

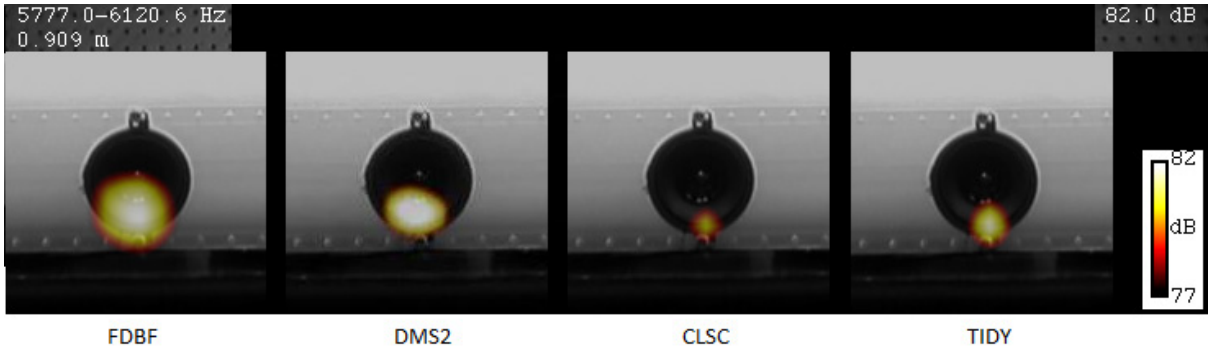

(c)

Figure 2. Beamform maps of narrowband frequency ranging between: (a) 972.5-1028.3 Hz, (b) 2174.6-2299.3 Hz and (c) 5777-6120.6 Hz.

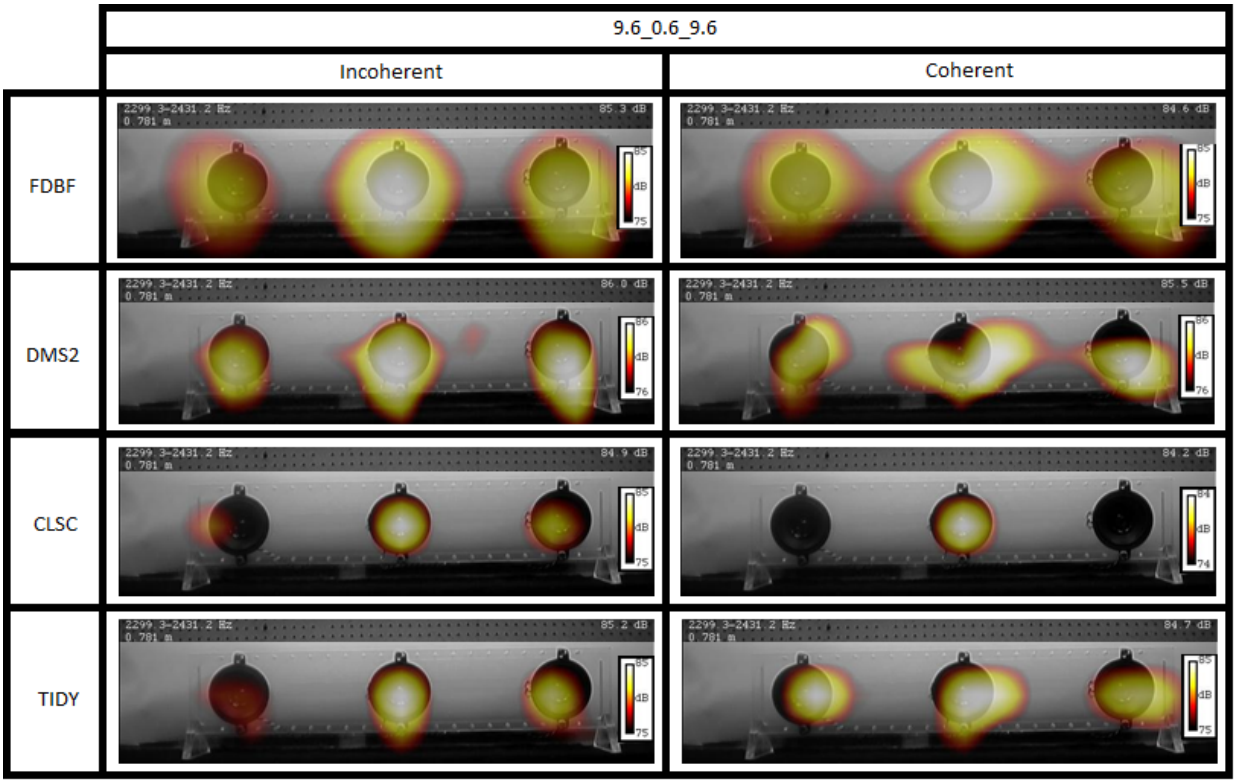

Figure 3. Comparison of beamform maps obtained from FDBF, DMS2, CLSC and TIDY for three incoherent and coherent sources of the same amplitude (9.6_0.6_9.6).

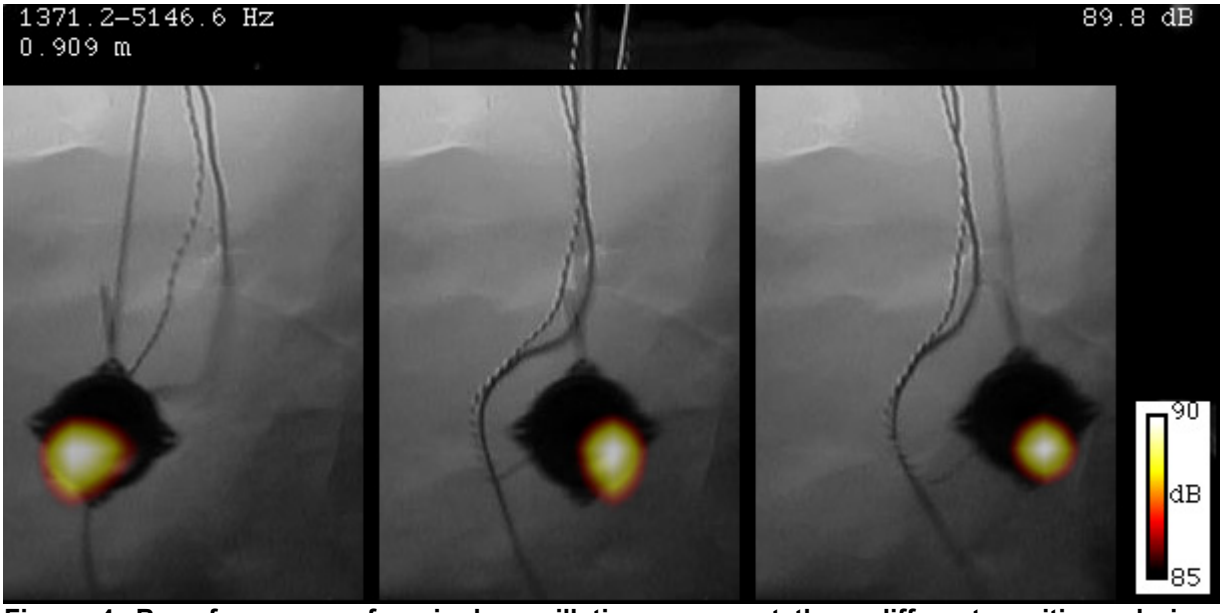

Figure 4. Beamform map of a single oscillating source at three different positions during oscillation obtained using TIDY.

Fig. 3 shows the beamform maps of three coherent and incoherent sources set at the same amplitude (9.6_0.6_9.6). Even though the FDBF and DMS2 were developed to resolve incoherent sources, they were successful in locating the three sources in both the coherent and the incoherent cases. However the difference in the formulation of the CLSC is clearly visible as it locates the maximum amplitude source with pin point accuracy and neglects the lower amplitude coherent sources. In the

incoherent case the CLSC is able to locate all the three sources. TIDY also does a good job in locating all the three sources in both coherent and incoherent cases. The main disadvantage with the FDBF, DMS2 and CLSC are that they are limited to a narrow band formulation. Thus larger bandwidth noise cannot be located using these algorithms. TIDY however is not limited in frequency bandwidth. This gives TIDY an advantage over the other beamforming algorithms and makes it a good choice for the wind turbine application. The effectiveness of TIDY in detecting a larger bandwidth moving white noise signal was also tested. The results are shown in Fig. 4.

After conducting calibration experiments, the phased array was used to locate the sources of noise generated by the wind turbine drive train. The test was run at 3 different conditions which corresponds to 3 different wind speeds. Table 3 gives details of the 3 different tests conducted in this study. The phased array was placed at 3.125 m away from the drive train and at the center, so that it covers both the driver part and the driven part of the drive train. The microphone was placed such that it's equivalent to placing a microphone at the centre of the phased array. Fig. 5 shows the different rpm of the driver motor and the generator for all the three cases. The Frequency spectrum from both the phased array and the single microphone for all three cases are shown in Fig. 6 and Fig. 7, respectively. We observe that the frequency spectra of both the phased array and the single microphone are similar in nature. The peak amplitude is about 4 dB higher than the single microphone values as observed earlier in the calibration experiments. Fig. 8 shows the beamform maps obtained for the three different test cases. For narrowband width the beamforming algorithm used was DMS2 and for broadband cases TIDY was used. We observe that at higher frequencies the algorithms are able to locate the noise generated by the gearboxes and the CVP. However the low frequency noise was not successfully located using these algorithms. In order to locate the sources at low frequency we will have to use a bigger array or use super resolution algorithms such as the MUSIC algorithm. Further, by using a combination of a single microphone and the phased array the low frequency noise could be effectively studied.

Table 3. Parameters for the three test cases used in this study.

Parameters	Test 1	Test 2	Test 3
Wind speed (m/s)	20	12	6
Turbulence	0	0	0
Input torque (Nm)	400	400	400
Transmission ratio	0.8	1.195	1.5
Power factor	ON	ON	ON
Power (kW)	3.7	2.1	1.5

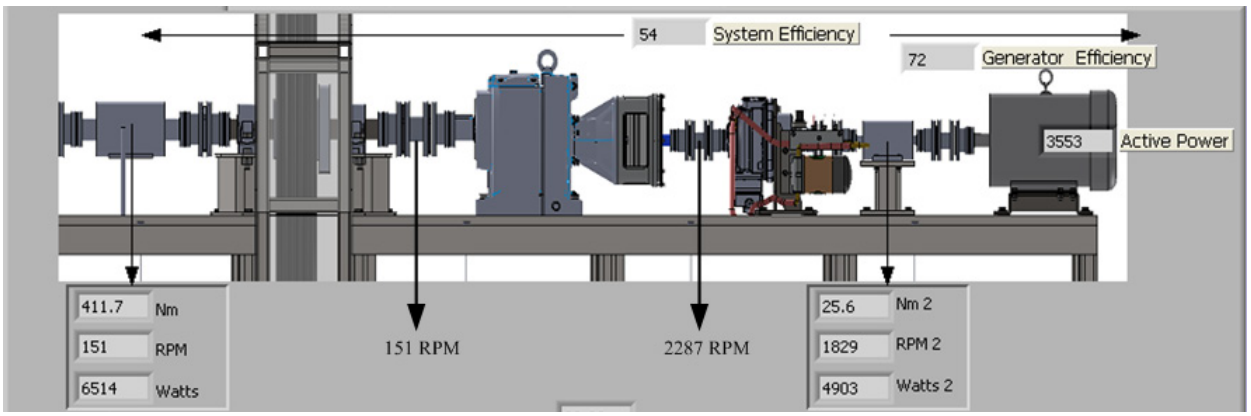

(a)

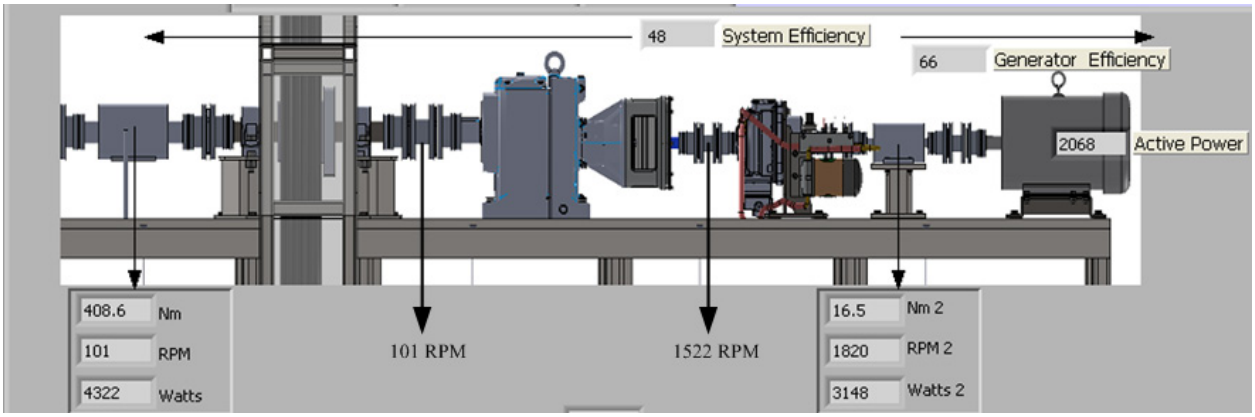

(b)

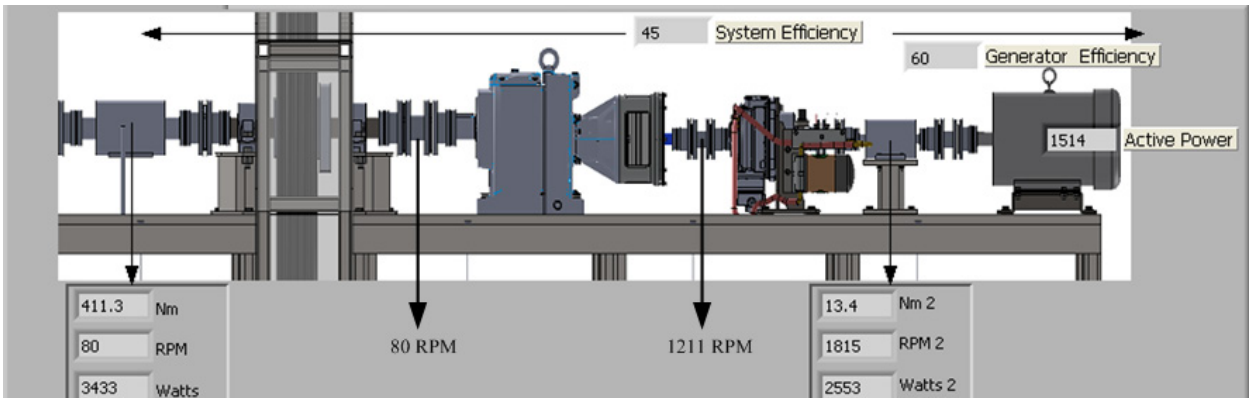

(c)

Figure 5. Operating parameters for the wind turbine drive train (a) Test 1; (b) Test 2; (c) Test 3.

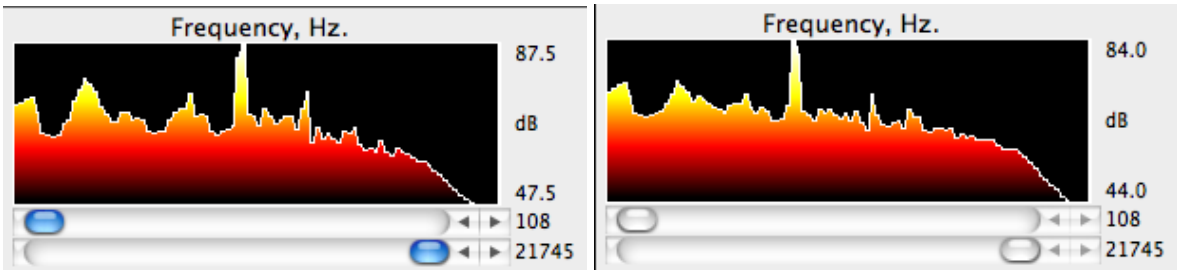

(a) (b)

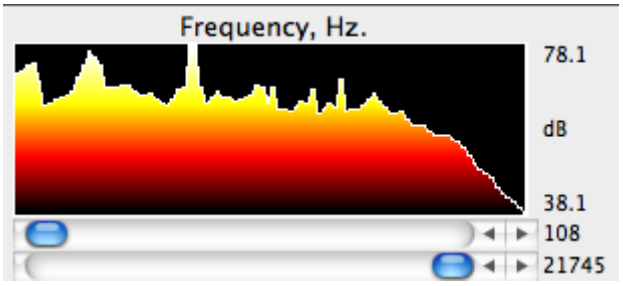

(c)

Figure 6. Frequency spectrum obtained using the phased array: (a) Test 1; (b) Test 2; (c) Test 3.

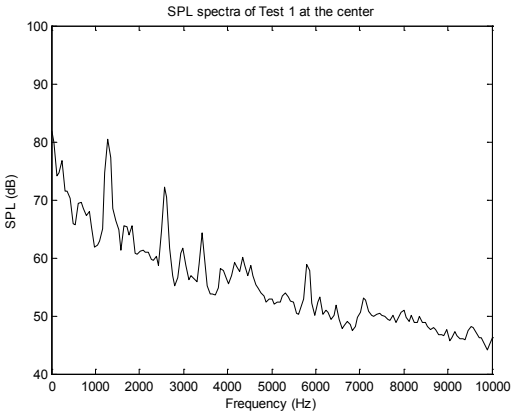

(a)

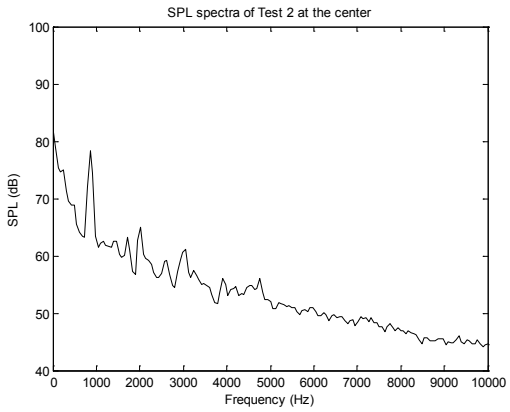

(b)

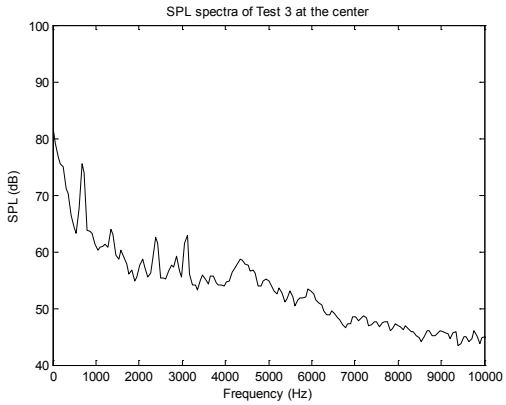

(c)

Figure 7. Frequency spectrum obtained using a single microphone: (a) Test 1; (b) Test 2; (c) Test 3.

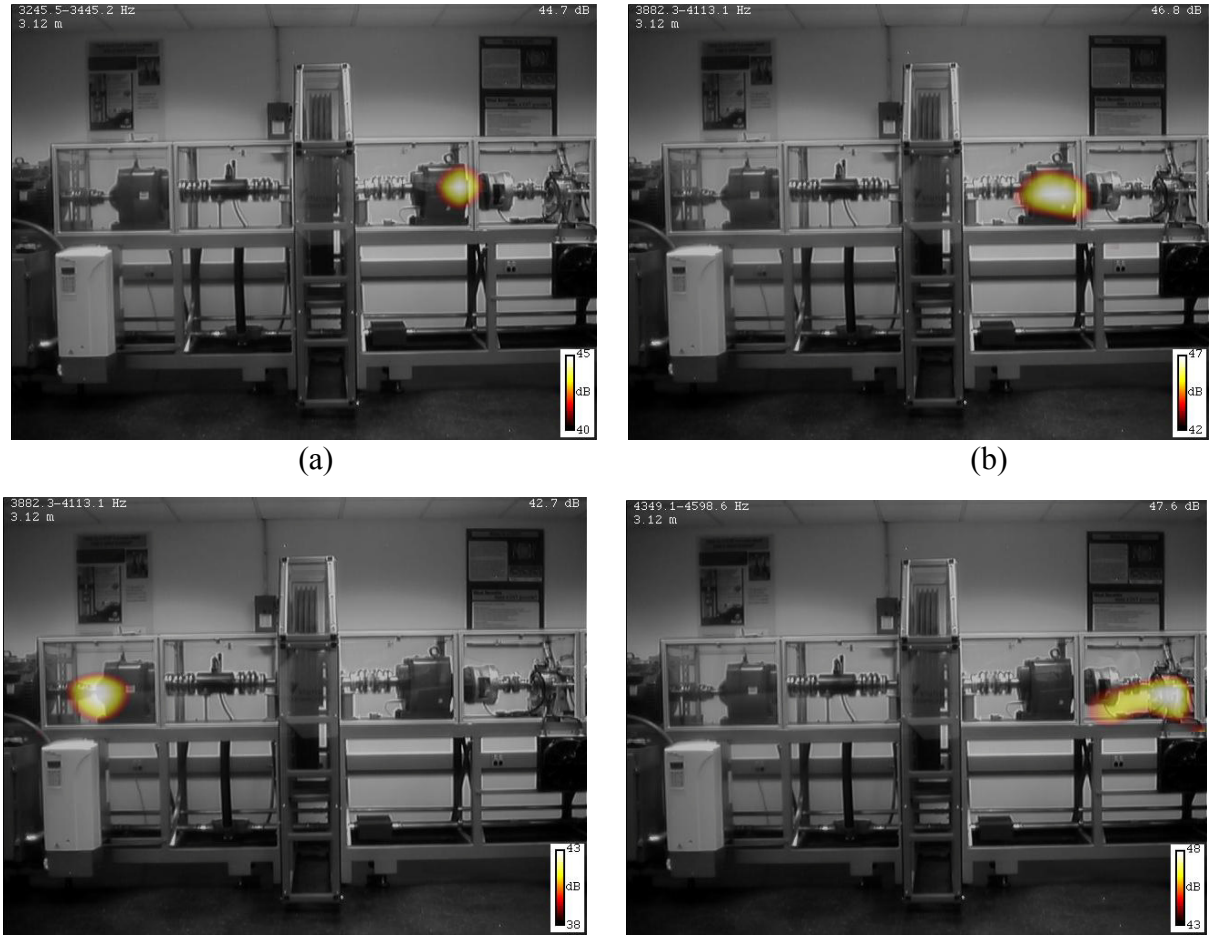

Figure 8. Beamform plots of; (a) turbine side gearbox noise of Test 1; (b) turbine side gearbox noise of Test 2; (c) drive side gearbox of Test 2; (d) turbine side CVP noise of Test 3.

Conclusions

In this paper we described a new test bed created at the Illinois institute of Technology that is capable of conducting an acoustic assessment of small wind turbine drive trains. The facility allows one to vary inflow speeds and turbulence. Acoustic measurements were made using a single microphone and a phased array. The phased array was initially calibrated using three 4 ohm dual cone speakers. The beamforming algorithms were able to locate the source/sources when they were subjected to a broadband white noise. We observed that although the FDBF, DMS2 and TIDY are formulated for incoherent sources, they were able to locate the sources in the coherent cases as well. The formulation of CLSC was clearly evident as it picks only the highest amplitude coherent source from the beamform map. While algorithms FDBF, DMS2 and CLSC are limited to a small bandwidth analysis, TIDY can analyze large bandwidth. The algorithms also located the source in case of moving sources. From the experiments we learn that for high frequency broadband noise TIDY is a good algorithm to use and for low frequencies super resolution algorithms such as MUSIC have to be used to effectively locate the sources.

Although our study provides some guidance on beamforming algorithm choice, further studies are necessary to determine the best suited algorithm for wind turbine applications.

Acknowledgement

The work described in this paper was funded by the US Department of Energy (DOE) with Mr. Brian Connor as Program Manager. The authors appreciate the guidance and technical support provided by Dr. Robert Dougherty of OptiNav Inc.

References

[1] P. Sijtsma, “CLEAN based on spatial source coherence”, *International Journal of Aeroacoustics* 6 (4) (2007), pp. 357–374.

[2] T. F. Brooks and W. M. Humphreys, “A deconvolution approach for the mapping of acoustic sources (DAMAS) determined from phased microphone arrays”, *Journal of Sound and Vibration*, vol. 294, pp. 856–879, Jul. 2006.

[3] Dougherty, R.P, “Extensions of DAMAS and benefits and limitations of deconvolution in beamforming,” AIAA–2005–2961.

[4] Dougherty, R.P. and G.G. Podboy, “Improved phased array imaging of a model jet,” AIAA Paper 2009-3186, Miami, FL, May 2009.

[5] Oerlemans, S., Sijtsma, P., and Mendez Lopez, B., “Location and quantification of noise sources on a wind turbine,” Journal of Sound and Vibration, Vol. 299, pp. 869-883, 2007.

[6] Ganesh Raman, “Wind turbines: clean, renewable and quiet?”, Noise & Vibration Worldwide, vol. 40, pp. 15-21, Nov. 2009.

[7] Ganesh Raman, “Advances in measuring noise from wind turbines”, Noise & Vibration Worldwide, vol. 41, pp. 19-25, Apr. 2010.