Fourth International Meeting on Wind Turbine Noise

Rome Italy 12-14 April 2011

Monitoring and Modelling the Vibrational Effects of Small (<50 kW) Wind Turbines on the Eskdalemuir IMS Station

Westwood, R.F.[1], Styles, P.[1], Toon, S.M.[1]

1 Applied and Environmental Geophysics Group, Keele University, Keele Staffs ST5 5BG, United Kingdom.

e-mail

r.f.westwood@epsam.keele.ac.uk

Abstract

It is known (Styles et al., 2005) that windfarms generate low frequency vibrations which propagate through the ground and have the potential to adversely affect sensitive installations, most notably seismometer arrays set up to monitor for nuclear tests. Significant work on the effects of large wind turbines has been carried out by Keele University as well as by Schofield (2002) and Fiori et al (2009). For the Eskdalemuir International Monitoring System station in Scotland, a vibration threshold was set, for wind farms within 50 km of Eskdalemuir, at frequencies around the 4 to 5 Hz region. However, with increased development, the threshold is being approached and small wind turbines (less than 50kW), even of the order of 15kW have also been restricted despite the differences in scale and modes of vibration. In order to protect Eskdalemuir a threshold limit was set for any turbine as a holding measure and a programme to try to establish whether they were really problematic has been carried out.

Models for two wind turbine types from the manufacturers Proven and Gaia-Wind have been calculated and measurement programmes carried out. It has been possible to demonstrate that in most cases these small turbines do not generate significant energy in the band of concern and that the levels are low enough to be negligible. Small turbines once evaluated and monitored by Keele University and given approval by the UK Ministry of Defence, will receive clearance for deployment around the Eskdalemuir site at distances greater than 10km.

1. Introduction

The Southern Uplands of Scotland has been an important area for sustainable power for many years. It is a large area of high topography, where high winds are prevalent, making it an excellent source of potential wind energy for both large and small wind turbines. The UK government in line with the Kyoto agreement has the challenge of reducing carbon emissions in the UK by 60% by 2050. The Scottish Executive, more ambitiously, recently set a target of 80% of the country's energy consumption to be generated from renewable sources by 2020. Renewable energy development, especially wind power will be an important contributor to achieving both of these targets and the Southern Uplands has the potential, according to the Department for Trade and Industry (DTI), to generate 40% of the UKs renewable wind capability.

The Eskdalemuir Seismological Recording Station (EKA) is situated in the middle of this resource area, in the Southern Uplands of Scotland, near Langholm, 65km south of Edinburgh (Figure 1). The station is operated by the Atomic Weapons Establishment (AWE) and forms a component of the International Monitoring System (IMS), part of the verification regime for the Comprehensive Nuclear-Test Ban Treaty (CTBT). The CTBT is an international treaty banning all nuclear explosions. Although it is not yet in force, the treaty was adopted by the United Nations General Assembly in September 1996 and a total of 182 countries had signed it by the end of 2010. Of these, 153 have also ratified the treaty, the latest being the Central African Republic in May 2010.

Consisting of twenty broadband seismometers, the array at EKA is arranged in two perpendicular arms of ten seismometers, with each approximately 10km in length (Figure 2). The arms act like antenna, meaning that incoming speed and direction of signals can be determined. The signal-to-noise factor of this array is increased by a factor of ~4.5 relative to a single sensor, (Bowers, 2010).

The Eskdalemuir station constitutes a proportion of the UKs contribution toward the treaty. Ratified as an auxiliary station of the IMS in February 2009, an upgrade in 2008 meant that the station could be designated a substitute primary station should a primary IMS station breakdown (Bowers, 2010). The UK is obliged by the treaty to ensure that the seismic array's detection capabilities are not compromised.

In February 2004, the UK Ministry of Defence (MoD) introduced a precautionary 80km exclusion zone around EKA (BWEA, 2005), banning all new wind farm developments within the zone, in case they compromised the detection capability of the Eskdalemuir station. This effectively removed 40% of the UKs renewable wind capability at this time, as identified by the DTI.

In 2004 the Eskdalemuir Working Group was established and the Applied and Environmental Geophysics Research Group at Keele University, funded by the MoD, DTI and the British Wind Energy Association, was assigned to conduct research to investigate the nature and levels of vibration from wind turbines and whether these would interfere with EKA. The study (Styles et al., 2005) focused on a wind farm containing 26 Vestas V47 (660kW, 40m hub height and 47m rotor diameter) turbines situated on similar geology and topography to Eskdalemuir. The study found that low frequency vibrations from the turbines could be detected on seismometers several

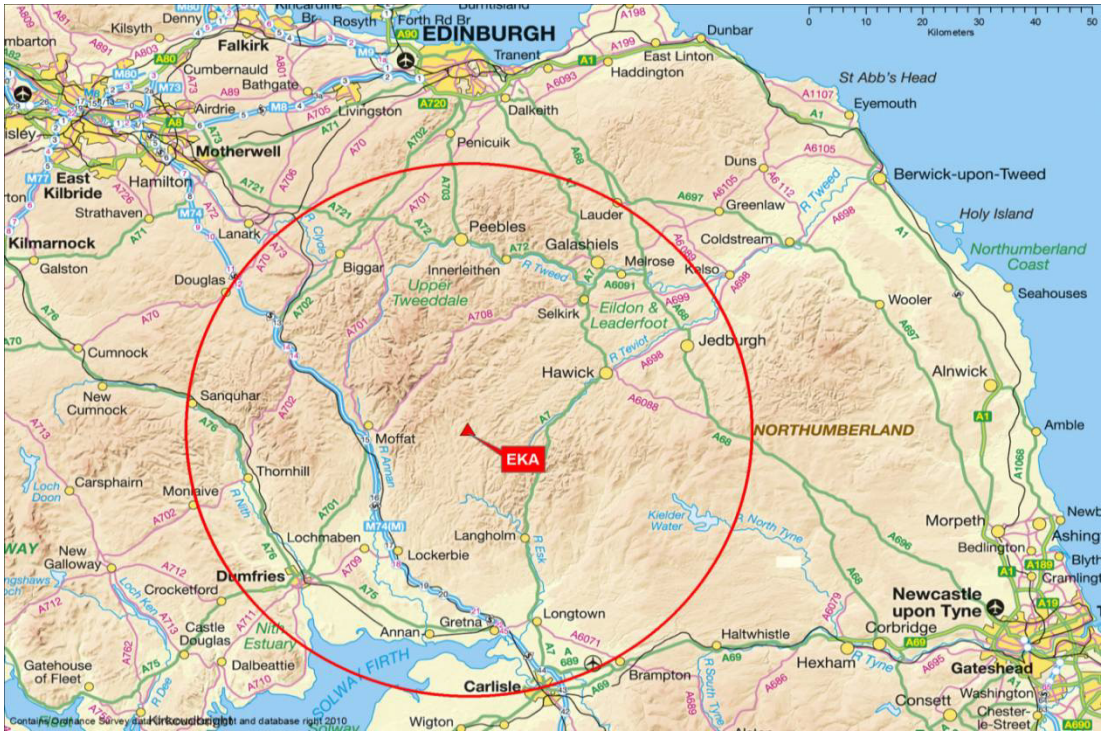

Figure 1 *The location of the Eskdalemuir (EKA) seismic station, with the 50km statutory consultation zone for wind power developments shown by the red circle. (Base map from Ordnance Survey Open Source collection)*

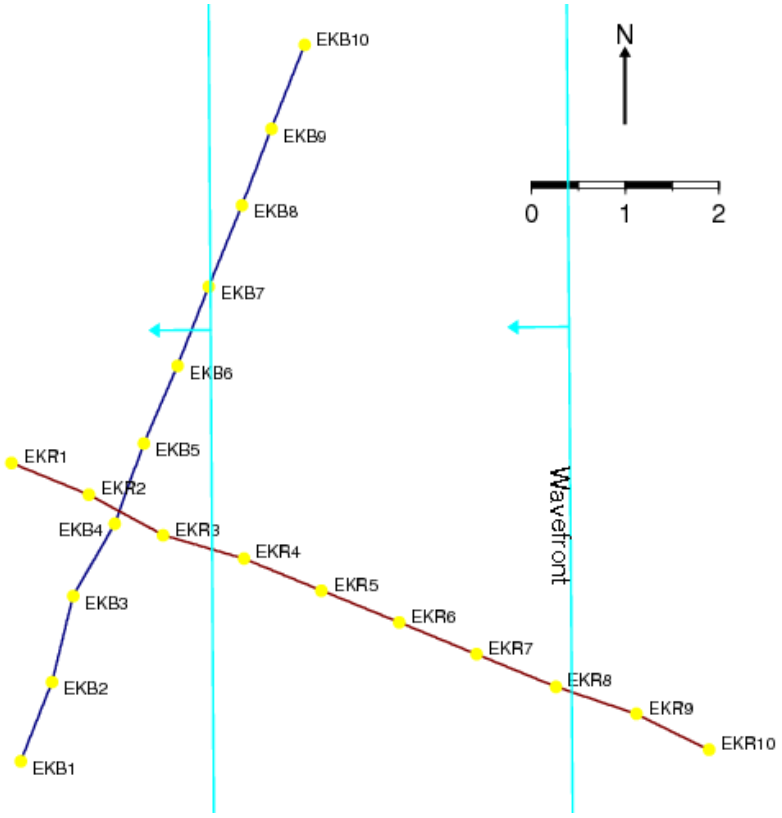

Figure 2 *The layout of the seismometers at the Eskdalemuir array (EKA). The cross over point lies at N55.33° W003.15°. (After Bowers 2010)*

kilometres away. From the results, a model was derived to predict the aggregate vibration contribution from any planned wind farm in the vicinity of EKA.

Subsequently, a maximum permissible background noise budget of 0.336nm was agreed with the Comprehensive Nuclear-Test-Ban Treaty Organisation in Vienna which would not compromise the detection capabilities of EKA. On the basis of the research results and the calculated noise budget, the MoD reduced the exclusion zone, introducing a statutory 50km consultation zone around EKA (Figure 1). However, no distinctions were made between different wind turbines based on size.

The study by Keele University corroborated earlier findings of work carried out by Styles (1996) (reported by Snow (1997), Manley & Styles (1995) and Legerton et al. (1996)) at a wind farm of 11 Bonus 450kW turbines at St Breock's Down in Cornwall. They found that harmonic components at multiples of 0.5Hz were transmitted through the ground with particular peaks at 0.5Hz, 3.0Hz, 4.5Hz, 6.0Hz, 7.5Hz and higher frequencies. Later in 2002, Schofield conducted a study of vibrations from the Stateline Wind Project which consists of 399 Vestas V47 turbines and found results consistent with the work carried out at St Breock's Down. Since the EKA research in 2005, little additional work has been published, with none to our knowledge specifically on the vibrations from small wind turbines. Fiori, et al. (2009) detail findings from a study of the vibrations from a wind farm near Hannover, Germany containing three 2.3MW 100m turbines and five 1.5MW 85m turbines. The wind farm is close to the GEO-600 gravitational wave detector. The work was conducted in 2005 and confirms the conclusions of Styles, et al. (2005).

The noise budget is now close to being reached and in February 2010 the MoD placed a blanket ban on all new wind turbines, large and small within 50km of EKA. In light of the large number of applications for small wind turbines within the zone, it was suggested by Bowers and Styles (2009 to MoD) that an interim guideline for small wind turbines might be as follows.

> *We recommend that contributions with a predicted level of less than 0.00001nm can be considered negligible. This recommendation for contributions from small- and micro-wind turbines should be considered interim, until trials have quantified the source term from such turbines and the 2005 model and guidelines adjusted if necessary. The 0.00001nm level is roughly equivalent to one micro turbine (1.5 kW) at 30 km, or one small turbine (50 kW) at 50 km. The interim level should allow consent for small turbines with < 10 kW in the zone 40-50 km from the seismometer array.*

This assumed that micro and small turbines generate vibrations in the 4-5Hz frequency band of interest, which are transferred into the ground and propagate to Eskdalemuir. Due to the size, weight and design of small wind turbines this may not be the case. It was envisaged that the frequencies will be higher than the band of interest, have lower amplitudes than those generated by the large turbines and attenuate quicker.

This paper details and presents the preliminary results of a study carried out during 2010 by the Applied and Environmental Geophysics Research Group at Keele University, funded by AWE and Gaia-Wind, on vibrations from small wind turbines, (defined to be <50kW).

Two models of turbine are considered (Figure 3). The Proven 35-1 is a 15kW, three blade self-regulating turbine. It has a hub height of 15m, rotor diameter of 9.6m and

Figure 3 *The two small wind turbines monitored and modelled in this paper; the Proven 35-1 (left) and Gaia-Wind 133 tubular tower (right).*

is mounted on a self-supporting monopole. The Gaia-Wind 133 is a twin blade, fixed speed turbine, mounted on an 18m tubular tower.

Monitoring and finite element modelling of both towers was undertaken and the results compared in order to validate the models. Modelling predicts the frequencies a turbine may generate. If the models are known to be reliable, it could be possible to predict frequencies without the need for monitoring. Both turbines were monitored using the same equipment for a period of 7 days under varying wind conditions during 2010.

2. Monitoring Sites and Equipment

The two small wind turbines discussed in this report are situated on private property in England, outside of the Eskdalemuir exclusion zone.

The Proven 35-1 site is located at Holestone Moor in Derbyshire, 11km south-west of the town of Chesterfield in the UK. The turbine is located in a field at the back of a collection of farm buildings and holiday cottages. Beyond it is farmland, outside of the property boundaries. The nearest main road is 1.6km away.

The Gaia-Wind 133 tubular tower site is located just outside the village of Wigton in Cumbria, 13km south-west of Carlisle in the UK. The turbine powers a dairy farm and is situated in a field to the rear and north-west of the main farm building and approximately 40m from the Carlisle to Barrow-on-Furness rail line.

Seismic monitoring is used to determine the resonant frequencies of the tower. Vibrations are measured over several days so that data under various wind speeds and directions is acquired. A combination of three-component broadband seismometers and accelerometers and single-component accelerometers are deployed to monitor the wind turbines.

Figure 4 shows the seismic noise levels for each of the sites compared to the Peterson low and high noise models (Peterson 1993). This indicates that both sites lie under the high noise model. Apart from frequencies around 1-3Hz, Wigton has higher background seismic levels, especially at higher frequencies where the two signals diverge.

The sensor locations in relation to the turbine and nearby buildings for the Proven 35-1 and Gaia 133 sites are shown in Figures 5 and 6 respectively. On both sites two single component accelerometers were placed horizontally inside the turbine perpendicular to each other (Figure 7), attached to the tower with strong magnets.

At Wigton, for the Gaia-Wind 133 turbine, in addition to the two accelerometers placed on the tower, a single uniaxial accelerometer was deployed in the ground at the base of the tower. Three further uniaxial accelerometers were placed in shallow pits in the ground (Figure 8) at distances of 10, 20 and 30m away from the turbine in a north-westerly direction. A single three-component accelerometer was buried south of the turbine, 70m away, in a pit about 1m below ground level and 0.3m square. The pit base was lined with sand and the accelerometer placed in a bag,

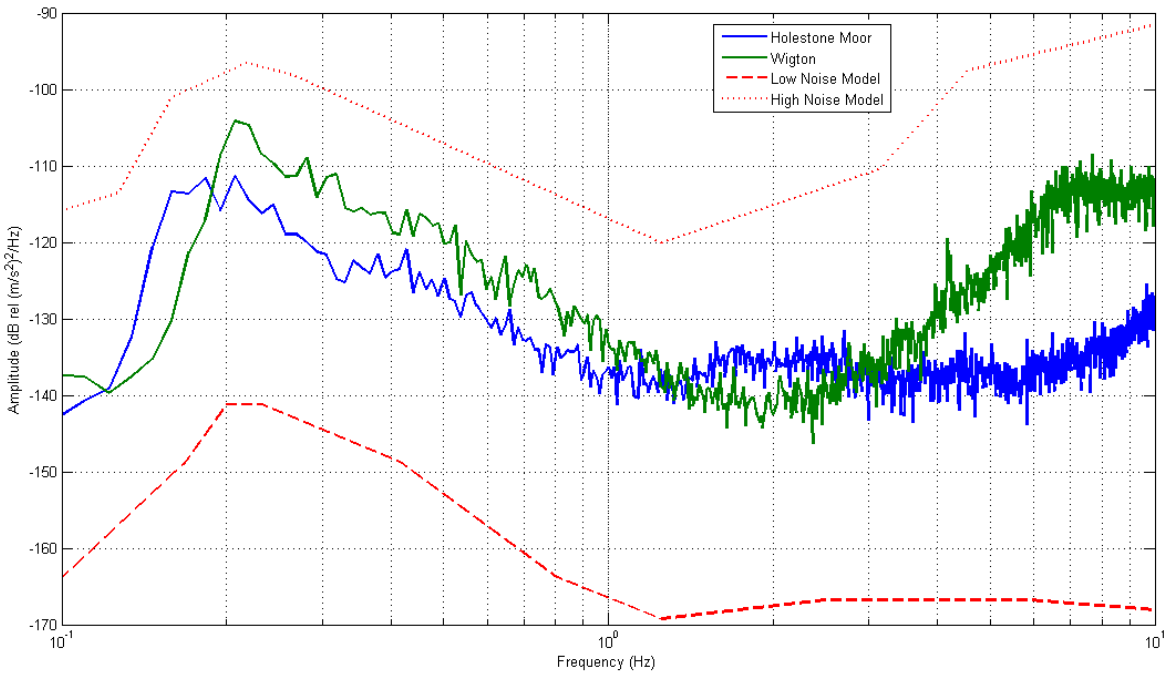

Figure 4 *Typical seismic spectra in the vertical component recorded at Holestone Moor (blue) and Wigton (green) during a quiet period when the respective turbine was not operational and the average wind speed for the hour very close to 0m/s, compared to the Peterson low and high noise models* **(Peterson, 1993)**.

levelled and packed with sand to prevent movement. The three component seismometer (Figure 9) was deployed on the other side of the railway 190m north-east of turbine.

At Holestone Moor, uniaxial accelerometers were also deployed in shallow pits in the ground at distances of 10, 20 and 30m away from the turbine. Due to the concrete foundations lying at the surface, it was not possible to place an accelerometer at the base of the turbine; instead this accelerometer was positioned at a distance of 40m. The three-component accelerometer was positioned 20m north-east of the turbine and deployed in the same manner as at Wigton. At Holestone Moor, three triaxial seismometers were deployed at locations agreed and acceptable to the owner. One was buried 30m north-west of the turbine. This was the furthest away in this direction that could be reached due to the property boundaries. This sensor lay in line with the turbine and a second seismometer was positioned on hard standing inside a large storage barn, 110m south-east of the turbine. The third seismometer (Figure 9) was located in the meter room, 108m east of the turbine and in-line with it and the uniaxial accelerometers positioned at 10m and 30m. The deployment of all seismometers at both sites was in line with the detailed installation instructions written by SeisUK (Brisbourne et al., 2010).

Wind speeds were recorded at Wigton using an anemometer mounted on a 6m mast.

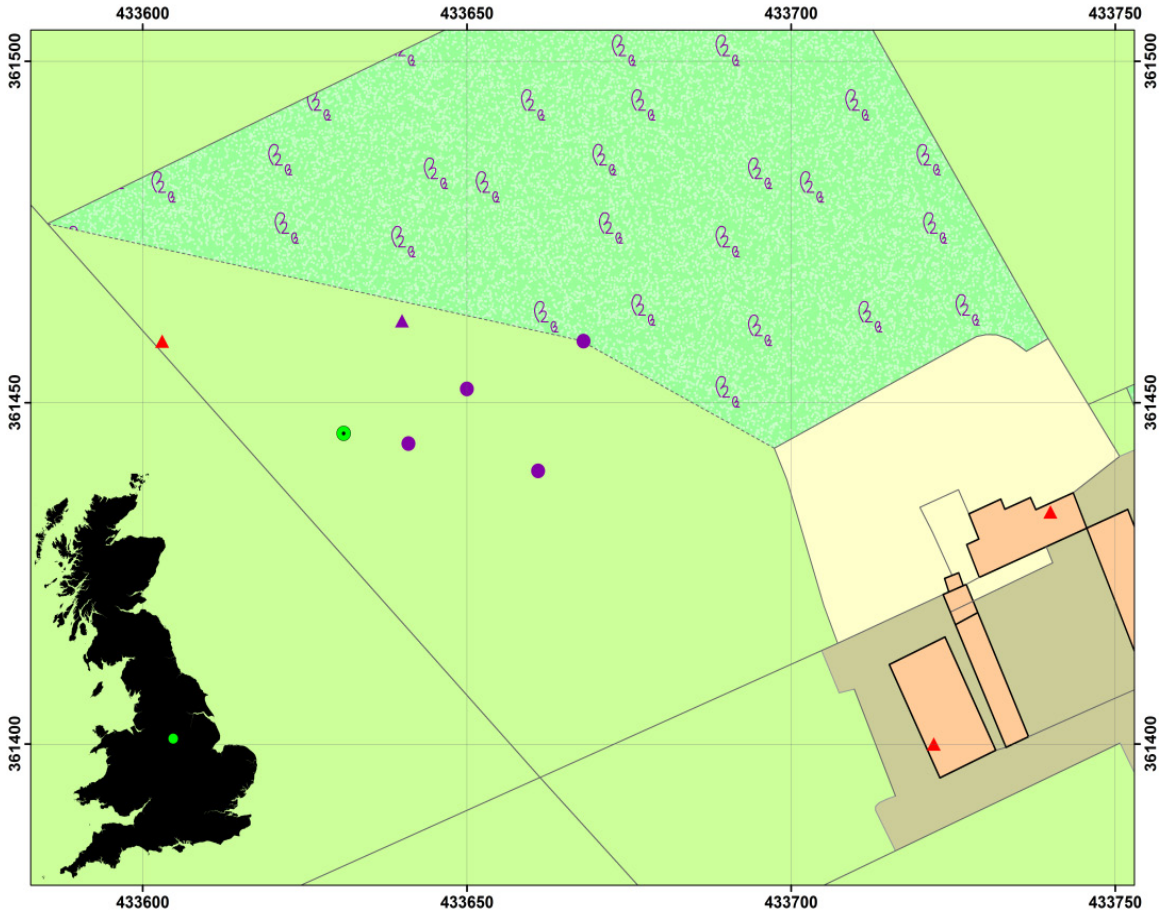

Figure 5 *The sensor locations for the monitoring of the Proven 35-1 turbine at Holestone Moor. Inset: the location of Holestone Moor within the UK. The green circle shows the turbine position, purple circles – uniaxial accelerometers, purple triangle – triaxial accelerometer and red triangle – triaxial seismometer. Coordinates are given in OSGB.*

However, the equipment was not available for use at the Holestone Moor site. It

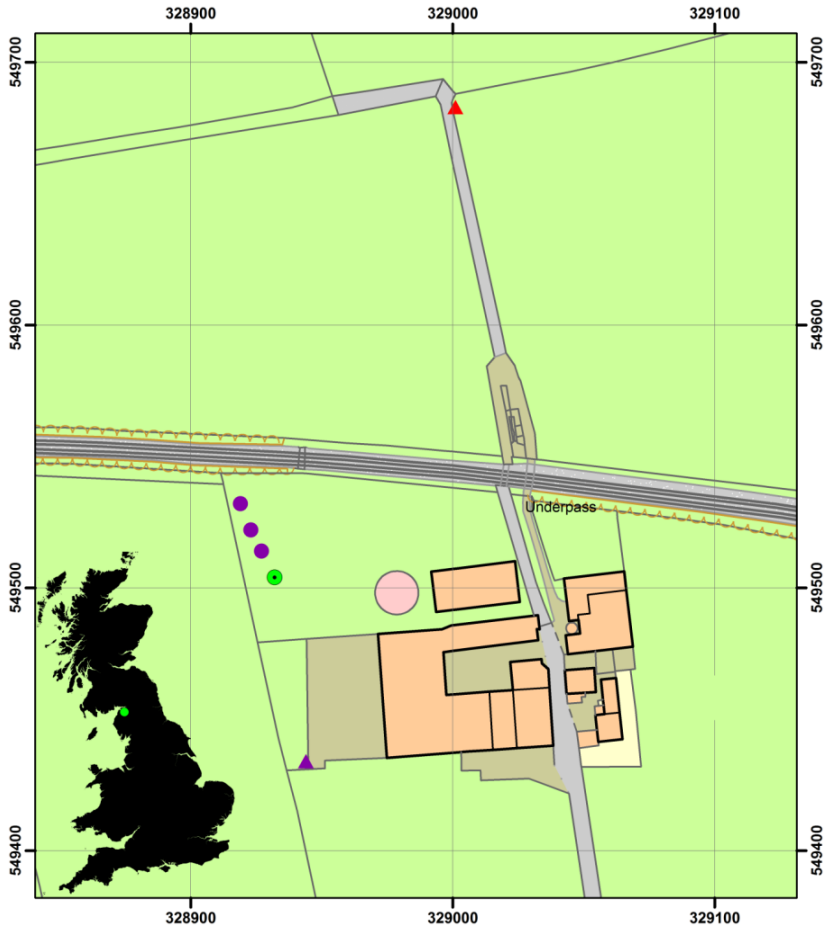

Figure 6 *The sensor locations for the monitoring of the Gaia-Wind 133 tubular tower turbine at Wigton. Inset: the location of Wigton within the UK. The green circle shows the turbine position, purple circles – uniaxial accelerometers, purple triangle – triaxial accelerometer and red triangle – triaxial seismometer. Coordinates are given in OSGB (m).*

Figure 7 *Two uniaxial CMG-5U accelerometers in situ inside the Proven 35-1.*

Figure 8 *Left: Shallow burial of CMG-5U accelerometer in horizontal position. Bedded level with sand. Right: CMG-5U in place in the ground covered with soil.*

Figure 9 *Triaxial seismometer in the meter room (left) at Holestone Moor and buried in the ground (right).*

should be noted that wind speeds quoted in this paper are averaged over ten minute periods. The values recorded on the anemometer provided a good indication as to periods when the wind turbine would and would not be operational. The Gaia-Wind turbine does contain its own anemometer, attached to the nacelle, to control the cutting in and out of the turbine at set wind speeds, but it was not possible to log these values.

3. Comparison of the vibration characteristics of two small wind turbines

It is known that large wind turbines generate frequencies in the 4-5Hz band (Styles et al., 2005) which are significant to the Eskdalemuir seismic station. Accelerometers were attached to the respective turbine and seismometers deployed at locations up to 170m away (described in Section 2). Recordings were obtained over a one week period and the raw data analysed to find periods when the turbines were operational and non-operational. Frequency spectra generated from the raw data were used to visualise the prominent frequencies present during a given time period.

Bending modes describe how a turbine bends at a given frequency and are defined by the number of nodes (points or lines of minimum vibration) which are present on the turbine at that frequency. Each bending mode has two possible frequencies, which may be very close together, occurring parallel and perpendicular to the direction the nacelle is pointing. The bending modes visible in the spectra will depend on the direction the sensor is placed within the tower. In Figure 10, the accelerometers were attached perpendicularly on the Gaia tower and the data gathered when the turbine was not operational (average wind speed of 0 ms^{-1}). Three peaks are visible on each sensor, but the higher frequencies, generated by the tower, are more spread out and do not correlate as well.

Figure 11 is a comparison of the frequency spectra for one hour periods using data gathered from an accelerometer attached to the respective turbine when it was operational and non-operational. The spectra for the Proven 35-1 have a similar trend and the peak for the first bending mode at 1Hz is particularly prominent in both. For the Gaia, when the turbine is non-operational, the amplitude drops and the spectra flatten off, although peaks at 7.5Hz and 9.5Hz which may relate to torsion and the second bending mode, respectively can still be seen.

Attenuation of the signal at each site is shown in Figure 12. These plots show spectra from a one hour period when the turbine is operational, using data from sensors at increasing distances away from the turbine. At both sites, by 100m the signal from the turbine is masked by the background noise. At Holestone Moor, this occurred by 30m and the frequency spectra for both the 30m and 100m sensors are almost identical.

At the Gaia site in Wigton, a sensor was placed in the ground at the base of the turbine. The bottom plot of Figure 12 shows that the signal is transferred into the ground but has already dropped by 20 dB/Hz. At 10m the signal on the tower is only seen in the ground for frequencies above 6Hz. By 70m the signal attenuates enough to not be seen above the background noise.

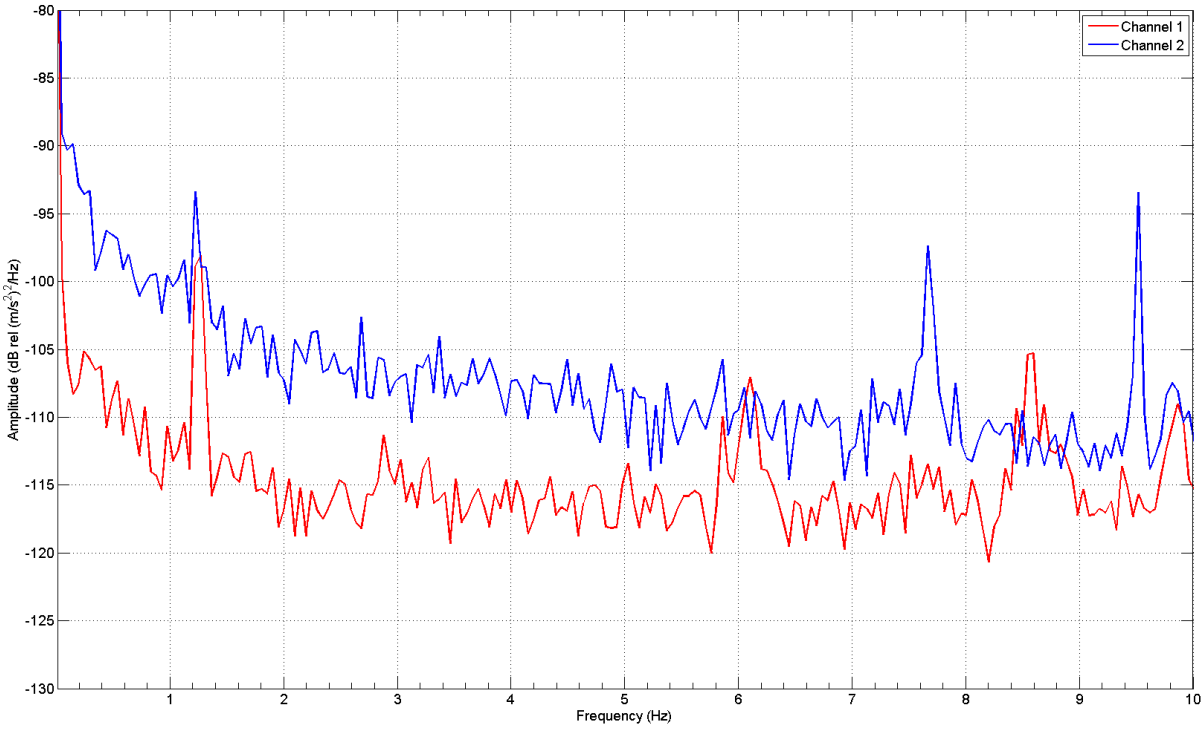

Figure 10 *Frequency spectra for the two accelerometers attached to the Gaia-Wind 133 turbine using data while the turbine was non-operational.*

Figure 11 *Comparison of the operational and non-operational frequency spectra for the Proven 35-1 turbine (top) and Gaia-Wind 133 turbine (bottom)*

4. Finite element modelling methodology of a small wind turbine

It is expected that small wind turbines of less the 50kW will generate higher resonant frequencies than their larger counterparts, in a similar manner to that of a trumpet producing a higher pitch than a tuba. There is less tubing (or tower) for the air to interact with and for vibrations to travel along. However, the size of the turbine is not the only factor to affect vibrations. Properties and thickness of the material, mass of the nacelle, position and size of the flanges and rotational speed of the blades affect the results and should be considered. In addition any vibrations are likely to have lower amplitudes which attenuate relatively quickly.

The vibrations can be seen by modelling a wind turbine using finite element software, like COMSOL. The software can perform a finite element analysis on a model of the turbine and calculates the respective eigenfrequencies. This is also a useful tool for locating key positions where accelerometers could or should not be placed. For example, positioning on a node is not recommended as this may not give the full range of vibrational spectra.

The models described in this paper were run on an Intel Core i7 2.93GHz desktop machine with 8GB RAM running Windows 7 64Bit. The finite element analysis was performed using COMSOL Multiphysics 3.5a software with the average runtime for a model when calculating 100 eigenfrequencies taking about two seconds.

The modelling process is a four-phase (Figure 13) iterative process. Firstly, the basic geometry is created and boundary conditions assigned. A mesh is subsequently applied to the structure and an eigenfrequency analysis performed to find the resonant frequencies. Finally the results of running a frequency response analysis on the model are compared with data collected in the field to verify the model. Depending on the accuracy, minor alterations can be made to the model in places where assumptions and simplifications have been made to try and achieve a greater level of accuracy, while optimising the computational power available.

The two small wind turbines discussed in this paper are mounted on hollow tubular towers and can be described simply using Shells which are contained within the Structural Mechanics module of COMSOL. This application mode allows for easy definition of boundaries by assigning values for material thickness, density,

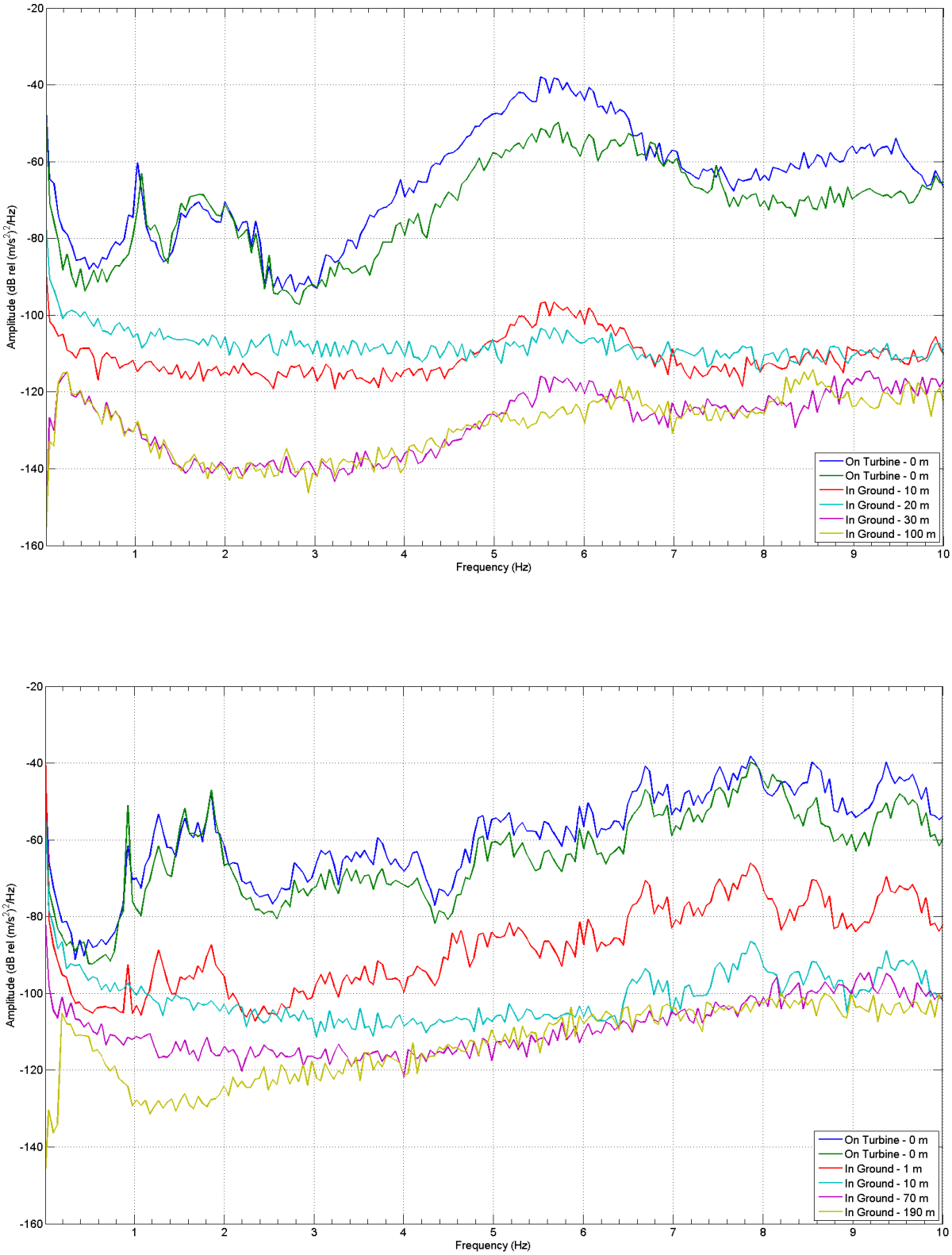

Figure 12 *Frequency spectra for the Proven 35-1 (top) and Gaia-Wind 133 (bottom) at increasing distances away from the respective turbine, showing how the signal attenuates with distance.*

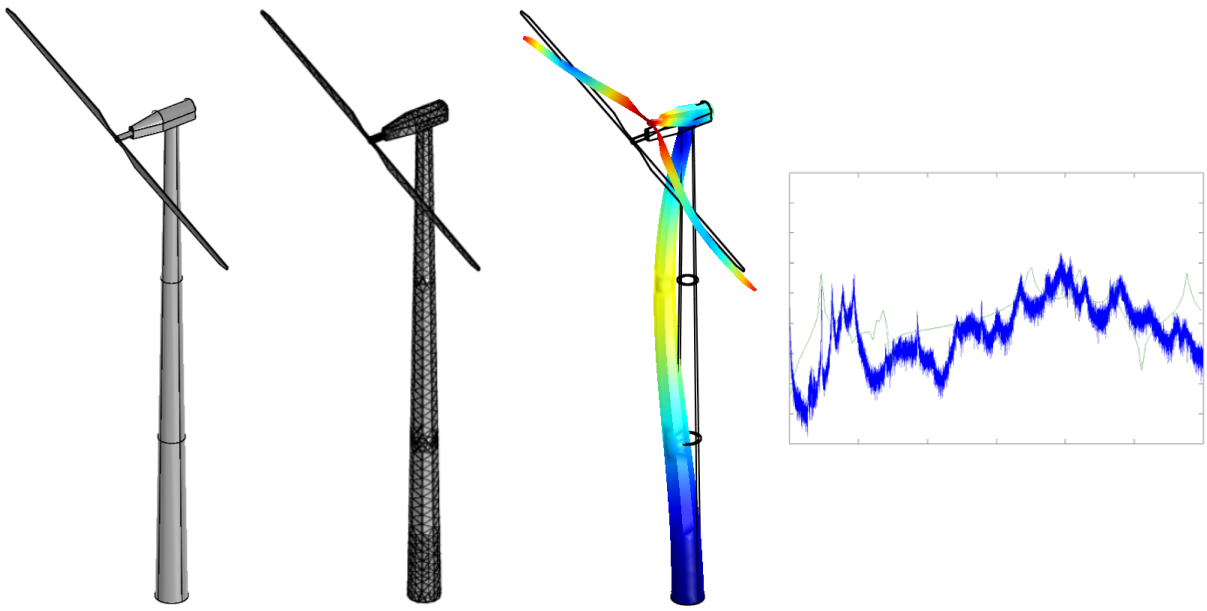

Figure 13 *The four stages of the finite element modelling process of a small wind turbine. From left to right: Creating the geometry and assigning boundary conditions; applying the mesh; running an eigenfrequency analysis; and comparing model results with the monitored data.*

Young's modulus and Poisson's ratio.

The towers are simplified by using a constraint on the base edge of the tower rather than including foundations. This replicates the interaction of the turbine with the concrete foundations. A stiffness matrix is applied to the base edge of the turbine and is defined as

$$F = -Kx,$$

Equation 1

where F is the force, x is the displacement and K is the stiffness matrix. In this case, K can be defined as a constant equal to the stiffness of concrete, 25GPa (COMSOL Materials Library).

The nacelle is simplified to consist of a hollow polyhedron, generated from a combination of simple shapes (sphere, cylinder, etc.). The density of the nacelle is calculated using the formula

$$\rho = \frac{m}{v},$$

Equation 2

where ρ is density, m is the mass of the nacelle (not including blades) and v is the volume of the nacelle in the model, taking the thickness into consideration.

An eigenfrequency analysis of a model identifies the natural resonant frequencies under given boundary and load conditions. A frequency response analysis will show the amplitudes of a range of frequencies. These can be compared to the results obtained from monitoring the turbine in order to verify the model (Section 5).

5. Predicted vibrations from two small wind turbines using FEM

Finite element analysis of each turbine was undertaken concurrently with the respective monitoring work, in order to assess the potential vibrations from the turbine. The models were verified using monitored data with the aim of creating a valid model which could be used to solve further problems without the requirement of further monitoring. Both the Proven 35-1 and Gaia-Wind turbines were modelled within COMSOL and had an eigenfrequency and frequency response analysis performed upon them.

The mesh for each turbine (Figure 14) was generated automatically within COMSOL and the statistics for each mesh are shown in Table 1. The differences between the two models occur due to the surface area. Although the Gaia is a taller turbine (18m compared to the Proven at 15m), the Proven 35-1 model is more complex. It includes the rudder section and wider blades generating a larger surface area.

Results for the Proven 35-1 eigenfrequency analysis are shown in Figure 15. Both of the first bending modes occur at 1.1HZ and the second bending modes at 7.11Hz and 7.52Hz respectively. The eigenfrequency analysis results for the Gaia-Wind 133 tubular tower turbine are shown in Figure 16. Both first and second bending modes on the Gaia occur at slightly higher frequencies than those of the Proven. The first bending modes are at 1.49Hz and 1.77Hz respectively and the second at 8.52Hz and 9.58Hz. Higher bending modes were also seen on both turbines.

A bending mode is defined by the number of nodes on the tower at a given frequency. There are two possibilities for each bending mode, occurring parallel and perpendicular to the direction the nacelle is pointing. The turbines were modelled with the length of the nacelle parallel to the y-axis.

In addition, the towers have breathing modes (Figure 17). Breathing modes are visualised where sections of the tower appear to be inflated, as if the tower had expanded with air and was ‘breathing’. These are more prevalent in the Gaia-Wind 133 than the Proven 35-1. There are a couple reasons why this may be so, the Proven 35-1 has a rudder, made from a polypropylene composite material (tradename Twintex), which is supported by a steel cross pole. This may provide extra support for the nacelle. Further, the towers differ in construction. Both towers contain three sections which decrease in radius with height. The sections of the Gaia-Wind 133 are fastened together with flanges, whereas the Proven 35-1 tower has interlocking sections, which overlap each other. As such this gives a double thickness to the tower in certain areas, producing a more rigid structure.

Turbine	No. of points	No. of triangular elements	No. of edge elements	No. of vertex points	Degrees of freedom
Proven 35-1	5390	10947	1845	396	32340
Gaia 133	2531	2517	736	77	13962

Table 1 *The mesh statistics for the Proven 35-1 and Gaia-Wind 133 models.*

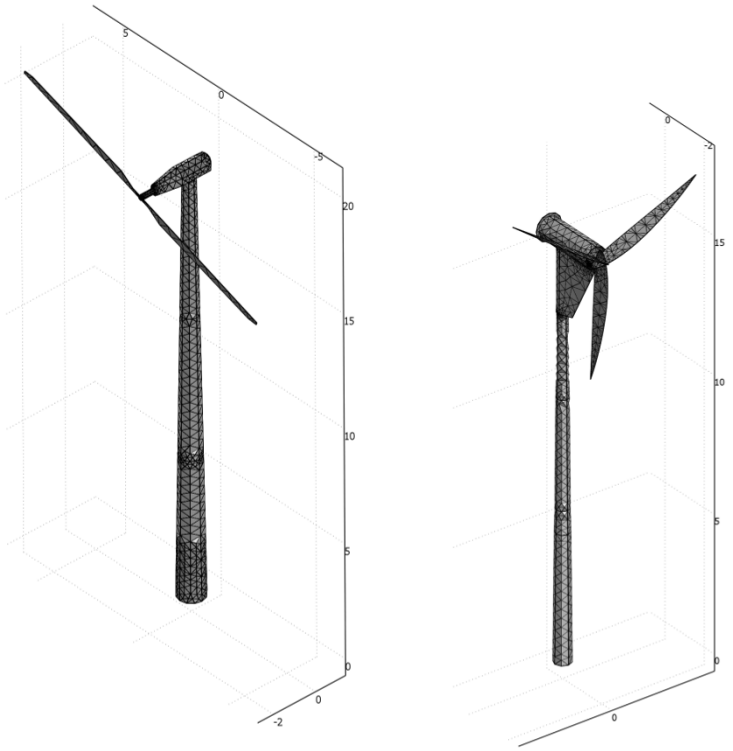

Figure 14 *The meshed models. Left: Gaia-Wind 133 Right: Proven 35-1. All dimensions are in metres.*

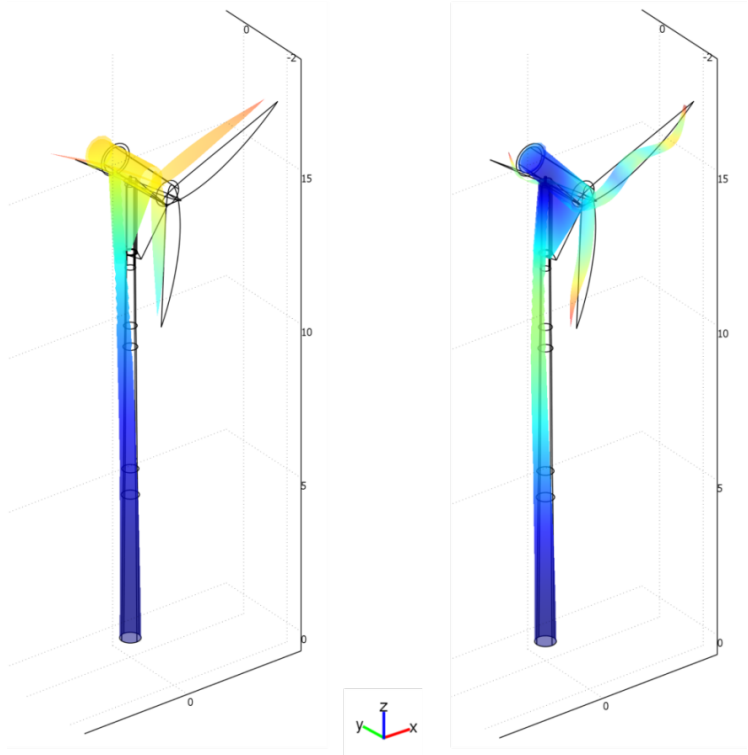

Figure 15 *The first (left) and second (right) bending modes of the Proven 35-1 wind turbine, occurring at 1.1Hz and 7.11Hz respectively. Colour indicates displacement with red being high and blue low. All dimensions are in metres.*

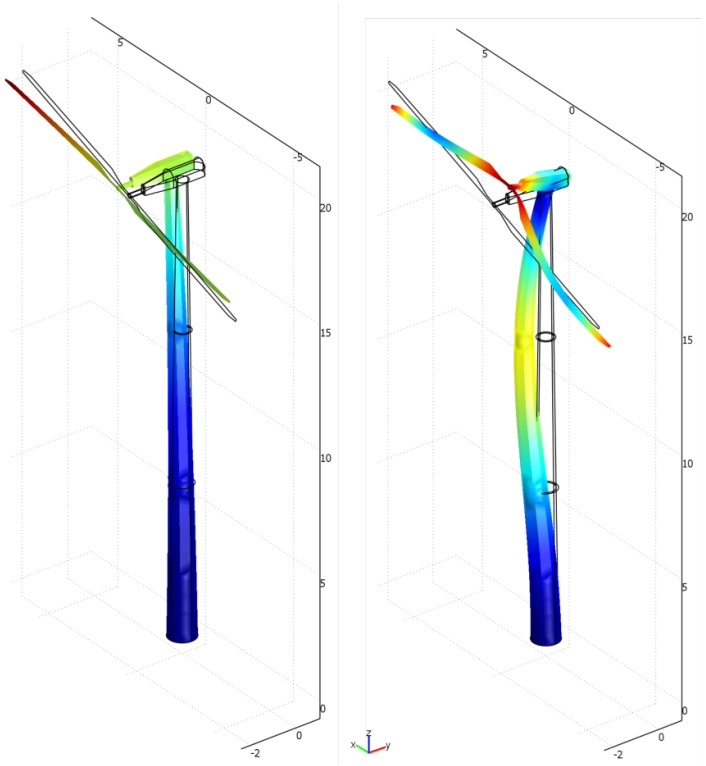

Figure 16 *The first (left) and second (right) bending modes of the Gaia-Wind 133 turbine with a tubular tower, occurring at 1.5Hz and 9.58Hz respectively. Colour indicates displacement with red being high and blue low. All dimensions are in metres.*

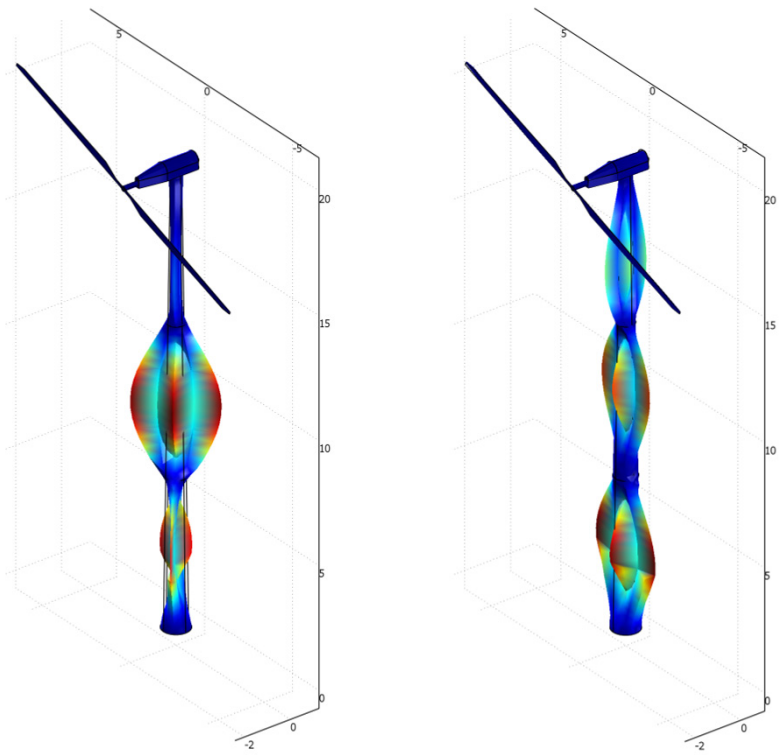

Figure 17 *Two examples of the breathing modes on the Gaia-Wind 133 turbine. The left image occurs at 34.7Hz and the right at 44.4Hz. All dimensions are in metres.*

6. Verification of the computational models

Verification of a wind turbine model is performed by comparing a frequency analysis from the model to a frequency spectrum generated from monitored data. A point is chosen on the model (Figure 18) closest to where the sensor data was collected. For the two turbines modelled in this paper the point selected was on the base edge of the tower, underneath the blades.

Figure 19 shows the comparison of the modelled and monitored data for the Proven 35-1 turbine at Holestone Moor. The frequency spectrum generated from the monitored data uses data acquired over an hour period, while the turbine was operational. The peaks for the first bending mode occurring at ~1Hz match well in terms of location and amplitude. Additionally, peaks which occur in the modelled data between 5 and 6Hz are visible in the monitored data, although it is a much broader peak. Overall, the general shape and amplitudes match relatively well.

The comparison of the data for the Gaia-Wind turbine at Wigton is presented in Figure 20. Again, peaks depicted in the frequency response from the model are clearly visible in the monitored spectrum. However, some of the peaks in the monitored spectrum are missing from the modelled spectrum. This could be due to complexities introduced by the dynamic nature of the turbine. The mechanics of the structure and rotation of the blades and nacelle would produce other frequencies in the monitored data that are not seen in the static model.

The amplitude of the peaks at just over 1Hz and 8.5Hz match particularly well.

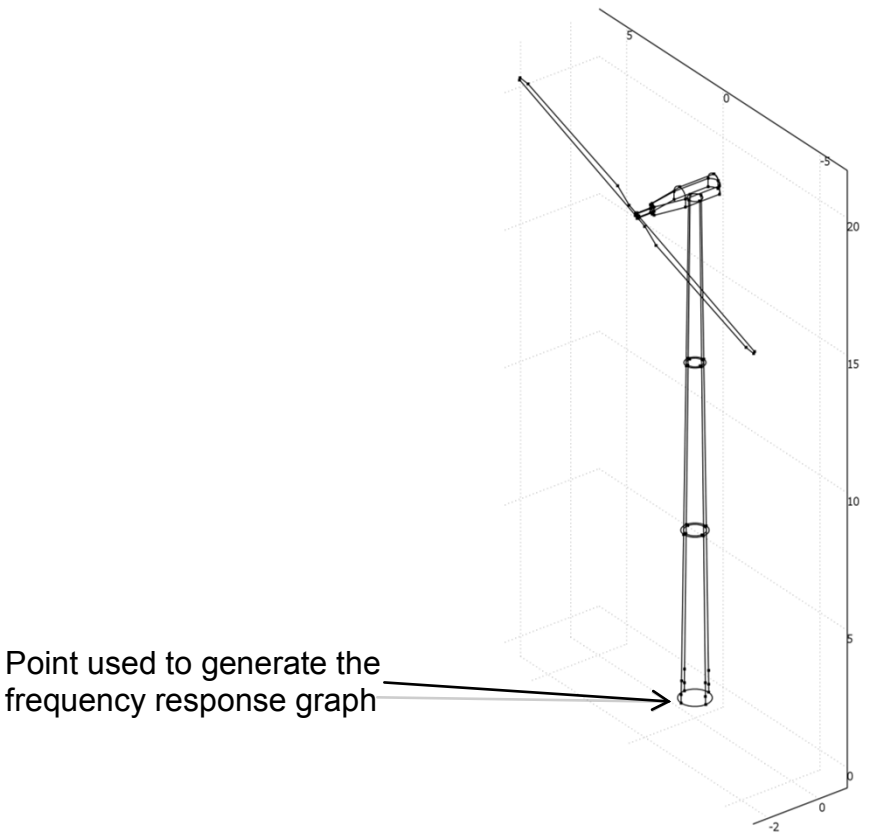

Figure 18 *Points available on the Gaia-Wind model on which a frequency response can be conducted.*

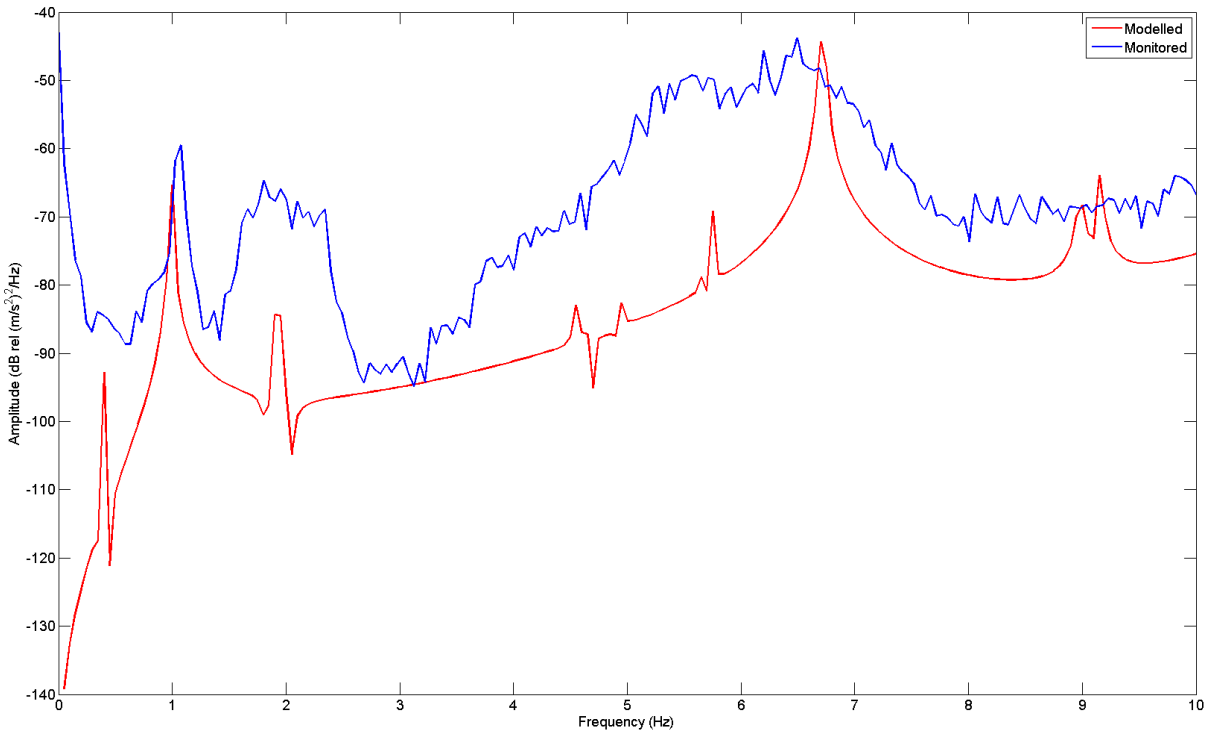

Figure 19 *Comparison of the FEA frequency response (red line) of the Proven 35-1 model and the frequency spectra using data obtained on the turbine while it was operational (blue line).*

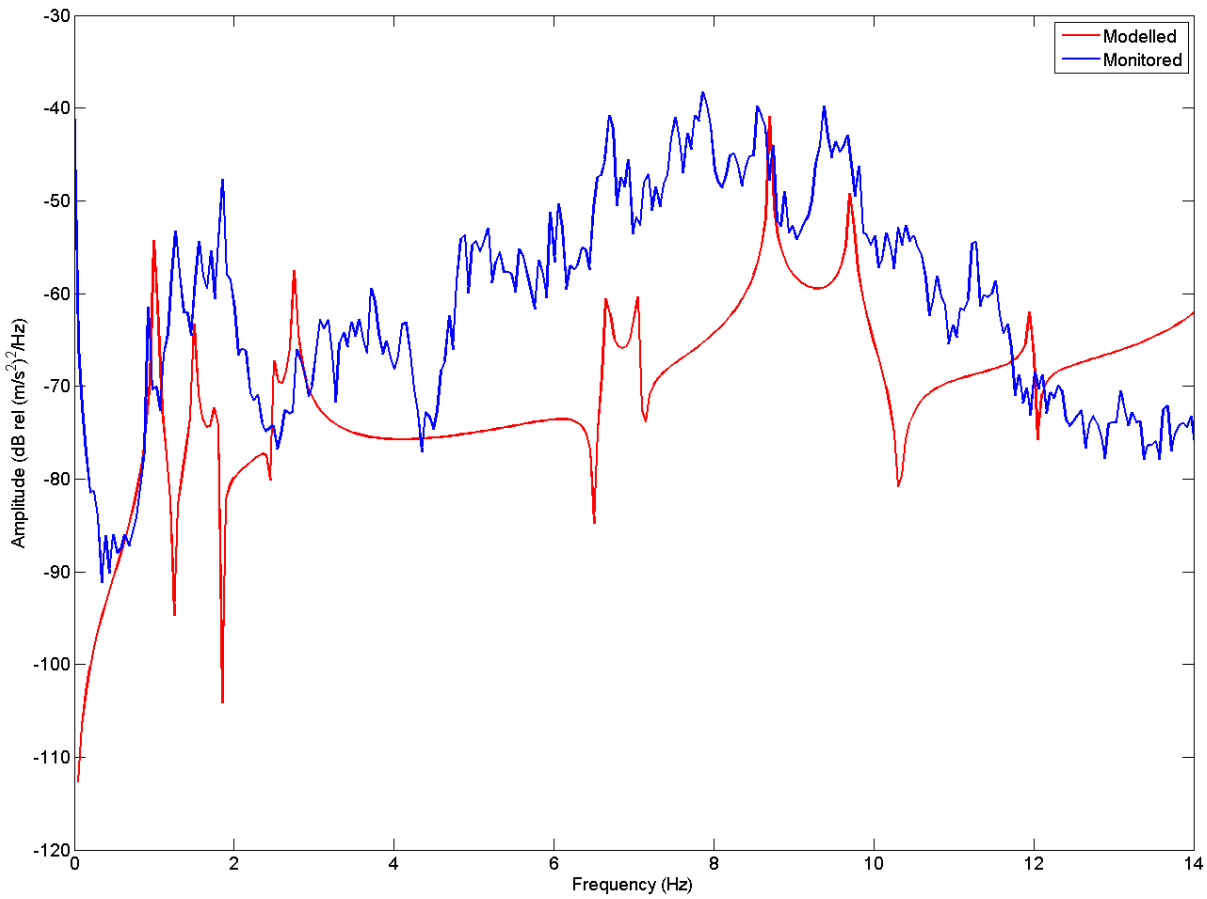

Figure 20 *Comparison of the FEA frequency response (red line) of the Proven 35-1 model and the frequency spectra using data obtained on the turbine while it was operational (blue line).*

7. Conclusions

Previous work (Styles, 1996; Schofield, 2002; Fiori et al., 2009) has demonstrated that modern wind farms generate vibrational frequencies in the 4 to 5Hz band of interest, detrimental to the detection capabilities of the Eskdalemuir seismic station in Scotland. This report discussed the monitoring and modelling of two small turbines, the Proven 35-1 and Gaia-Wind 133 tubular tower to investigate whether they generate the same frequencies and how any frequencies which are generated attenuate.

Monitoring of the two turbines has shown that some frequencies (for the bending modes) are present when the turbine is not operational as well as when it is, although the amplitude drops by ~35 dB rel $(m/s^2)^2$/Hz on the Proven turbine and ~40 dB rel $(m/s^2)^2$/Hz on the Gaia. When operational, the signal has attenuated enough to not be seen above the background noise at a distance of 100m at both sites.

Using finite element analysis, the peaks seen in the monitored data can be identified as different bending modes of the towers. The second bending modes occur out of the critical 4-5Hz band at 7.1Hz and 7.5Hz for the Proven and 8.5Hz and 9.5Hz for the Gaia.

The models generate results which are relatively well representative of the monitored data, although not as noisy. As the models are static, vibrations caused by the dynamics of the actual turbine, e.g. blade rotation, are not seen. Also, monitored data spectrum will show frequencies which may have been generated from sources external to the turbine, such as farm machinery or at Wigton, a train passing by.

As a consequence of the work presented in this paper, the MoD has issued revised guidelines regarding small wind turbines in the Eskdalemuir region (MoD to RenewableUK, Ref. Safeguarding/Egmts/Policy/20101217, 2010). In summary this means:

No wind turbine of any size will be allowed within 10km of Eskdalemuir. Within the statutory consultation zone (10km-50km), the interim level of 0.00001nm for small wind turbines (<50kW) remains unless,

1. The Applied and Environmental Geophysics Research Group at Keele University have monitored the turbine and provided the MoD with suitable report based evidence on the vibrational spectra for a specific design type of small wind turbine.
2. Once the MoD confirms that the specific small wind turbine-type has been shown to excite negligible seismic energy in the frequency pass-band of interest for EKA, that specific turbine will be accepted within the statutory consultation zone.

This allows landowners and farmers in Southern Scotland to take advantage of small scale wind developments to produce sustainable energy assisting the UK reach its target of 60% renewable energy by 2050.

Machines in the range from 50 to 500kW are still subject to the total aggregate threshold but further work is required to evaluate their true potential for interference.

References

Bowers, D., 2010. *The seismometer array at Eskdalemuir, Scotland (EKA)*.

Brisbourne, A., Horleston, A., Hawthorn, D. & Lane, V., 2010. *SEIS-UK 6TD & ESPD Field Methods*. version 5.6.

BWEA, 2005. *BWEA Press Release: MOD lifts objections to wind energy projects: Industry and Government overcome key barrier to development*. [Online] Available at: www.bwea.com/media/news/eskdalemuir.html [Accessed 11 January 2011].

Fiori, I. et al., 2009. A study of the seismic disturbance produced by the wind park near the gravitational wave detector. In *Third International Meeting on Wind Turbine Noise*. Aalborg, 2009.

Legerton, M.L. et al., 1996. Low Frequency noise and vibration levels at a modern wind farm. In *Proceeding of Inter-Noise 96*. Liverpool, 1996.

Manley, D.M.J.P. & Styles, P., 1995. Infrasound generated by large sources. In *Proceedings of the Institute of Acoustics*., 1995.

Peterson, J., 1993. *Observations and modeling of background seismic noise*. Open-File Report 93-322. Albuquerque, New Mexico: U.S. Department of Interior Geological Survey.

Schofield, R., 2002. *Seismic Measurements at the Stateline Wind Project - And a Prediction of the Seismic Signal that the Proposed Maiden Wind Project Would Produce at LIGO*. T020104-00-Z. LIGO.

Snow, D.J., 1997. *Low frequency noise and vibration measurements at a modern wind farm*. ETSU W/13/00392/REP.

Styles, P., 1996. *Low Frequency Wind Turbine Noise and Vibration: Microseismic Investigations*. Contract Number 503922: ETSU/Powergen.

Styles, P. et al., 2005. *Microseismic and Infrasound Monitoring of Low Frequency Noise and Vibrations from Windfarms: Recommendations on the Siting of Windfarms in the Vicinity of Eskdalemuir, Scotland*. Applied and Environmental Geophysics Research Group, Keele University.