5th International Meeting
on
Wind Turbine Noise
Denver 28 – 30 August 2013

Suppression of the structure-borne sound from a wind turbine generator using active vibration control devices: model experiment

Tetsuya MIYAZAKI INC Engineering Co., Ltd. 1-15-18 Hyakunin-cho Shinjyuku-ku, Tokyo Japan
E-mail: miyazaki@inc.ihi.co.jp
Keita UCHINO INC Engineering Co., Ltd. 1-15-18 Hyakunin-cho Shinjyuku-ku, Tokyo Japan
E-mail: k_uchino@inc.ihi.co.jp
Keisuke KOUNO INC Engineering Co., Ltd. 1-15-18 Hyakunin-cho Shinjyuku-ku, Tokyo Japan
E-mail: k_kouno@inc.ihi.co.jp
Yasuo INOUE INC Engineering Co., Ltd. 1-15-18 Hyakunin-cho Shinjyuku-ku, Tokyo Japan
E-mail: inoue@inc.ihi.co.jp
Masashi YASUDA VEL Co. 36-4-702 Senriokakami Suita-shi, Osaka Japan
E-mail: yasuda@vel-sha.com

Summary

We have performed a series of experiments to evaluate the effectiveness of our active vibration control devices on suppressing the structure-borne sound of wind turbines. The structure-borne sound on a wind turbine structure, which is generated by a speed-up gear system, tends to propagate along the tower structure, and then radiate through the tower surface. Its frequency is roughly between 150Hz – 200Hz according to our on-site measurements. This mechanical noise can be effectively suppressed by reducing the vibration of the tower structure.
We developed a set of devices for active vibration control consisting of tuned mass dampers with piezoelectric actuators. In our model experiment, the devices were installed to the vibration source mount and the tower surface.
Significant suppression of structure-borne sound was obtained. Also, several difficulties were found concerning the structure modes and degrees of freedom of vibration control.
This research was promoted by Japan's Ministry of the Environment.

1. Introduction

Noise from wind turbine generator (WTG) consists of aerodynamic noises and mechanical noises [1]. These elements are quite different in their generation and radiation mechanism. Various approaches to suppress noise from WTG have been developed.
Generally, aerodynamic noise is regarded as dominant component. So the majority of current efforts to suppress WTG noise concentrate on aerodynamic noises typically airfoil optimization and trailing edge treatment [2, 3]. However, mechanical noises with tonal components can cause serious annoyance responses from wind farm community residents. In fact, in Japan a few cases of complaint have been reported that appear to be related to tonal mechanical noise. This shows the importance of the problem and necessity of applicable measures.

Therefore, we started a research and development with a focus on tonal mechanical noise suppression. Assignments of this research are showed below.

1) Understanding mechanical noise of WTGs through on-site measurements
2) Establishing a conceptual design to suppress mechanical noises
3) Development of active vibration control devices
4) Performing a set of model experiments using active vibration control devices

We will report the results and discuss the details in this paper.

2. Understanding of mechanical noise from WTG

2.1 Method of measurements

We performed on-site measurements at two WTG sites where typical tonal noise had been observed. Table 2.1 shows specifications of WTGs to be measured. They have induction generators, therefore both have speed-up gear boxes.
The main purpose of the measurements is to find out noise generation, propagation and radiation mechanisms, thus we employed several methods shown below.

1) Noise and vibration measurements on the nacelle and the tower structure in operation
   Figure 2.1 and 2.2 show noise and vibration measurement positions on nacelle and the tower structure. The digital data recorder continuously collected all signals from sensors. Comparing the frequency analysis results on different points, we could see the propagation path of the mechanical noises.
2) Noise measurements on the reference position according to IEC61400-11 method [4]
   Figure 2.3 shows standard acoustic measurement positions set by IEC 61400-11. The reference position is located on the leeward side of the WTG. The microphone was mounted at the centre on a flat hard board with double-layered wind screens. All the measurements in operation were done simultaneously.
3) Measurements of vibration transmission characteristics between the nacelle components and the internal surface points of tower by hammering test
   Vibration responses were excited on each sensor by hammer impacts on the nacelle components. Correlation analysis between impact signal and response signal showed vibration transmission characteristic (or accelerance) including amplitude and phase information.

Table 2.1 Specification of WTG to be measured

Name	Site A	Site B
Electric generation capacity	1.0MW	1.5MW
Generator type	Induction generator	Induction generator
Rated rotation	20rpm	20rpm
Hub height	68m	65m
Rotor diameter	61.4m	70.5m

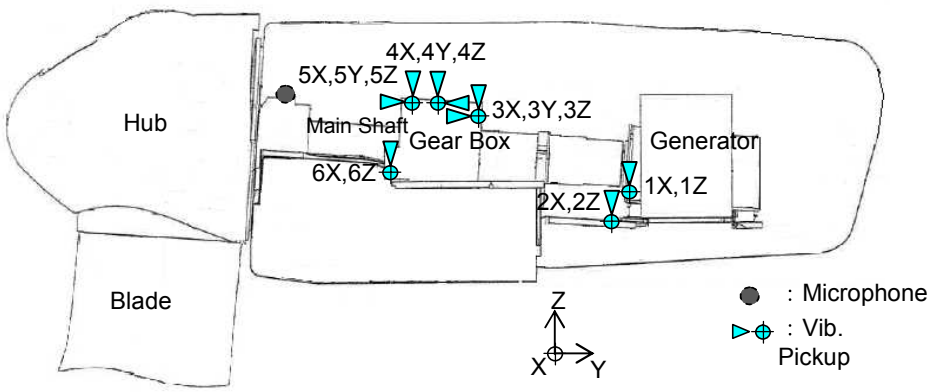

Figure 2.1 Measurement position in a nacelle

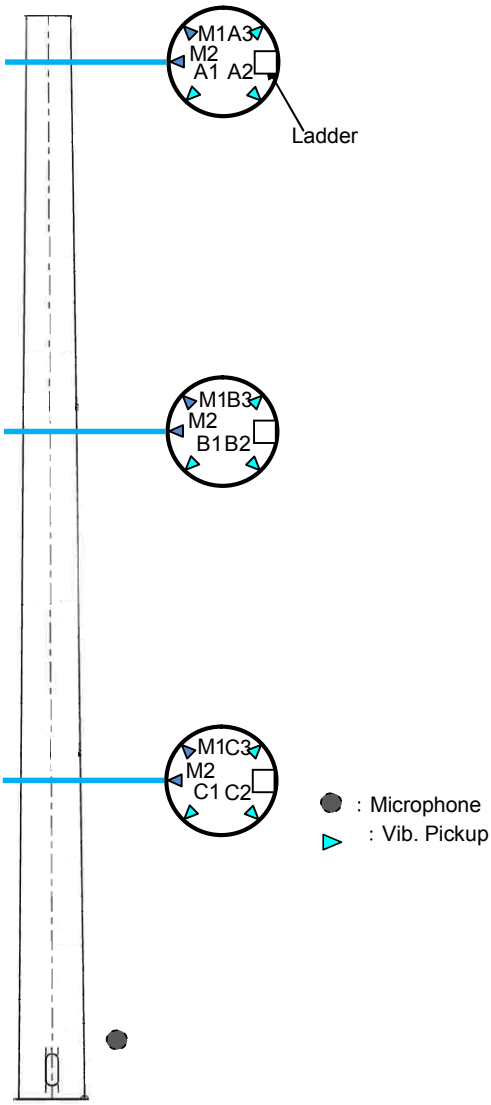

Figure 2.2 Measurement position on a tower

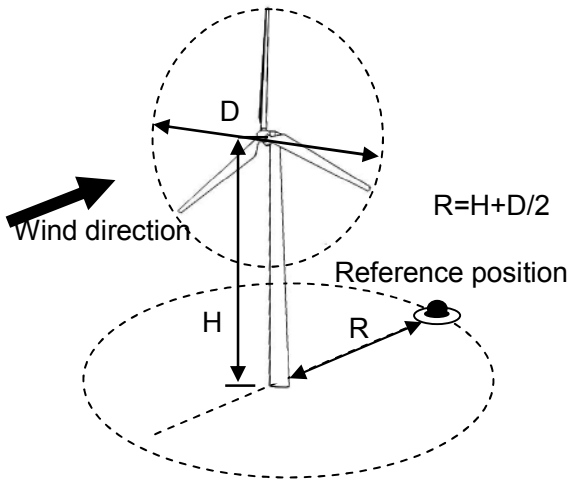

Figure 2.3 Standard acoustic measurement position set by IEC 61400-11

2.2 Measurement result

1) Noise and vibration measurement results in operation

Figure 2.4 and 2.5 shows one-third octave band frequency characteristics of noise and vibration acceleration at rated power operation.

The frequency characteristics measured at two different sites show peaks of the same 200Hz band.

The frequency matches to the speed-up gear mesh frequency set by rotation numbers and the numbers of teeth.

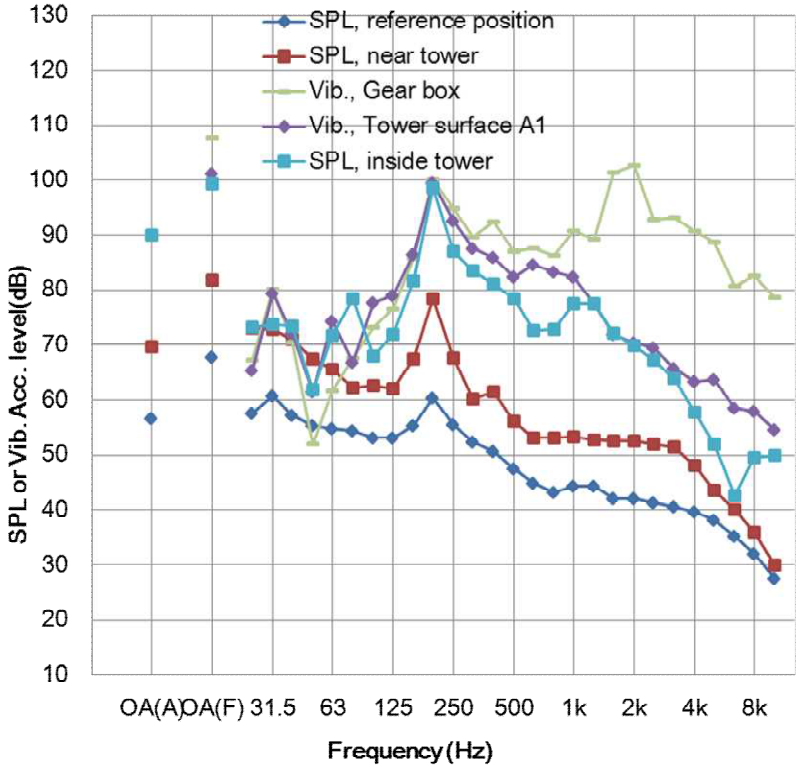

Figure 2.4 One-third octave band frequency characteristics of noise and vibration on site A

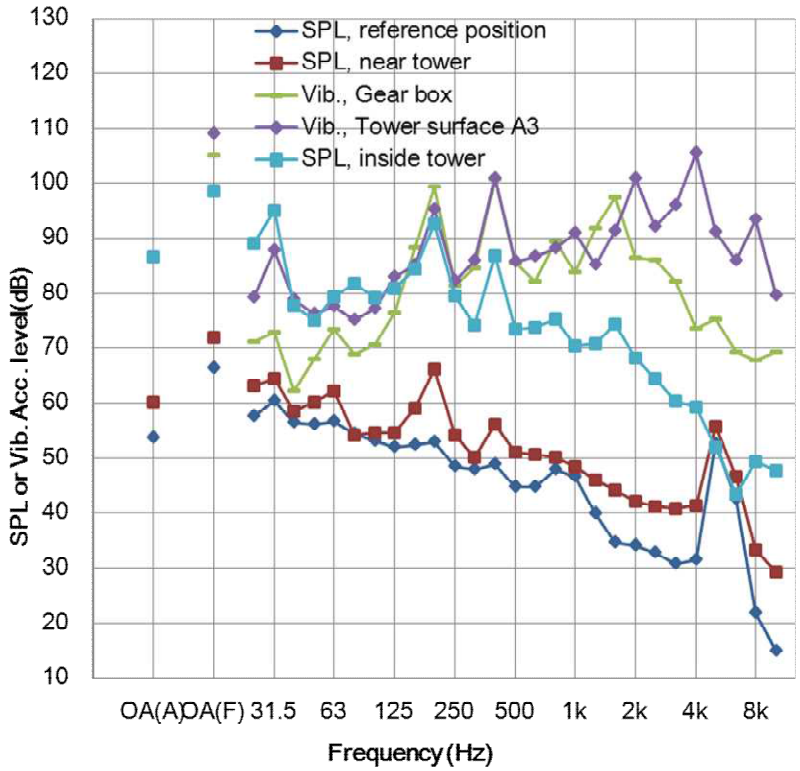

Figure 2.5 One-third octave band frequency characteristics of noise and vibration on site B

2) Vibration transmission characteristics between nacelle components and the tower
Figure 2.6 and 2.7 shows vibration transmission characteristics (or accelerance) between force signal of impact hammer and vibration acceleration responses at each measurement position. The figure clearly shows very low vibration attenuation between A layer and B layer along the tower structure.

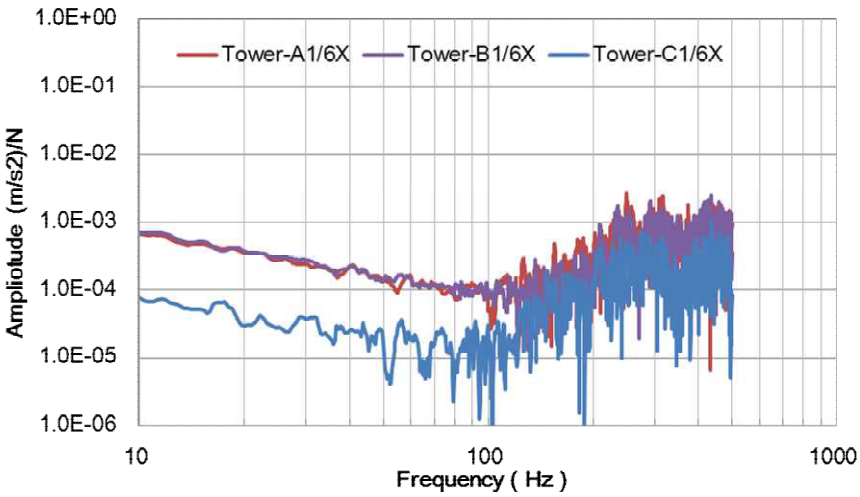

Figure 2.6 Vibration transmission characteristics between the nacelle component and the tower at Site A

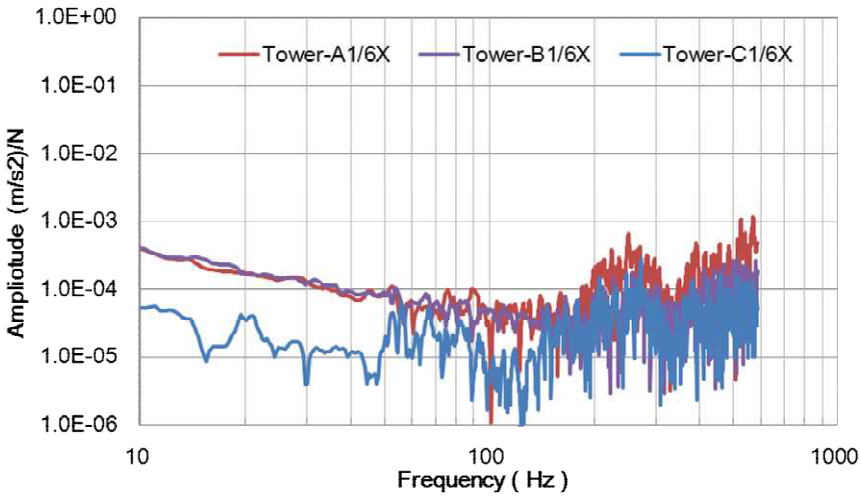

Figure 2.7 Vibration transmission characteristics between the nacelle component and the tower at Site B

3) Estimation of vibration excitation force
Vibration excitation force generated by gear box in the nacelle can be evaluated from the measured value of the vibration acceleration in operation and the accelerance on its mounting point. Table 2.2 shows the calculated values on each site. This huge excitation force estimated is making it difficult to suppress mechanical noises.

Table 2.2 Calvuations of the vibration excitation force generated by the gear box

Site	Position	Direction	Frequency (Hz)	Vib. Acc. (m/s^2)	Accelerance ($m/s^2/N$)	Excitation force (N)
A	Gear box	X	197.5	0.759	8.65.E-05	8769
B	Gear box	X	203.8	0.326	3.51.E-05	9293

Note: Both WTG were at rated power.

2.3 Mechanism of mechanical noise

Figure 2.6 is a schematic of the mechanism of mechanical noise generation. The vibration excited by the speed-up gear propagates along the tower surface, and then produce structure-borne sound that is radiated to exterior space.
This mechanism was drawn from the following observational results.

・For both of noise and vibration frequency characteristics, the peak frequencies were the same, for all the measurement positions.
・The speed-up gear mesh frequency and the observed structural vibration frequency matched exactly.
・The vibration can propagate easily from the nacelle component to the tower surface.

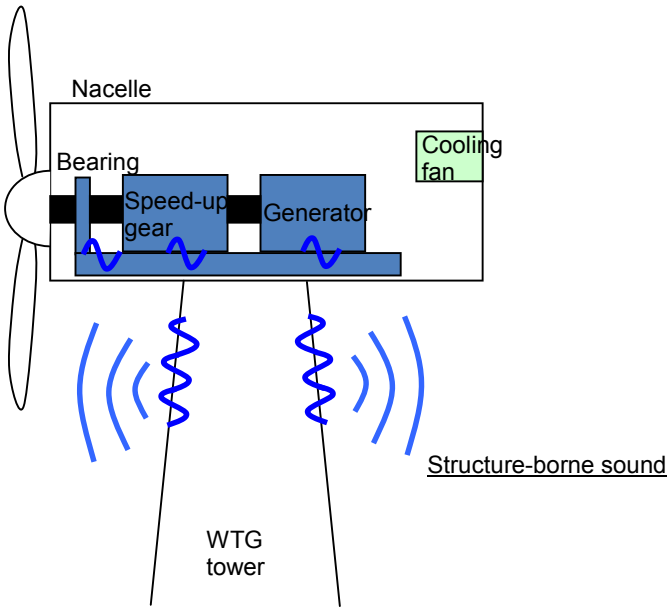

Figure 2.6 Schematic of the mechanism of mechanical noise generation

3. Suppression of mechanical noise

3.1 Conceptual design

To suppress mechanical noise (i.e., structure-borne sound), a straightforward way is to suppress vibration on the tower surface. Several methods are available as suppression techniques.

1) Vibration isolation on nacelle component mountings
2) Additional structural damping on the tower surface
3) Blocking of noise radiation from the tower surface
4) Vibration control on the structure using passive or active control devices

Practically, large-scale remodelling of major components or reconstruction of the main structure will not be applicable for actual existing WTGs. From this point of view, vibration isolation and radiation blocking are hard to employ.
Although attaching damping materials to the tower structure is a simple and valuable measure, covering full surface of the tower will be a hard task.
Application of vibration control devices probably needs fewer remodelling procedures and is easier in construction. For this reason, while some technical difficulties are expected, it will be most adequate for given conditions.
Therefore, we have decided to develop a set of applicable vibration control devices.
There were several technical requirements set by the actual situations of mechanical noise:

・Vibration control devices that have high efficiency and light weight
・A function to follow a variable vibration frequency

The configurations of vibration control devices can be passive type such as tuned mass damper or active type with various actuators.
To meet the requirements, we considered that active type was more suitable because of its design flexibility and ease of extension.
Based on these concepts, we worked out the basic design, test production and model experiments.

3.2 Development of control device

Though several configurations can be applied to an active vibration control device, we selected active tuned mass damper which have a shape like cantilever with piezoelectric actuators. Figure 3.1 shows block diagram of the active anti-resonance control. This type of control is regarded as anti-resonance tuned mass damper with actuator support. The main feature is such that the control force acts on the damper spring, not on the damper mass. Figure 3.2 shows a schematic of damper unit. The configuration has a simple structure and easy control. We obtained the control characteristics of this unit through basic tests, and the results showed good performance for our purpose.

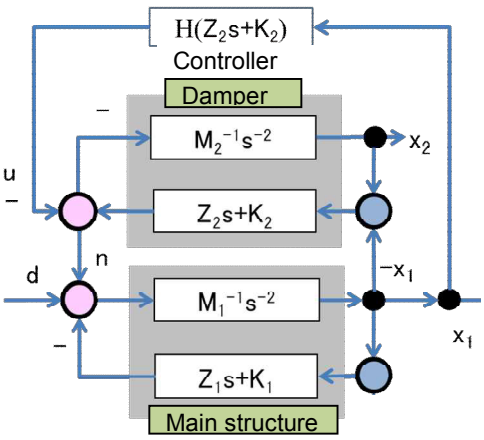

d: Input disturbance u: control force

Figure 3.1 Block diagram of active anti-resonance control

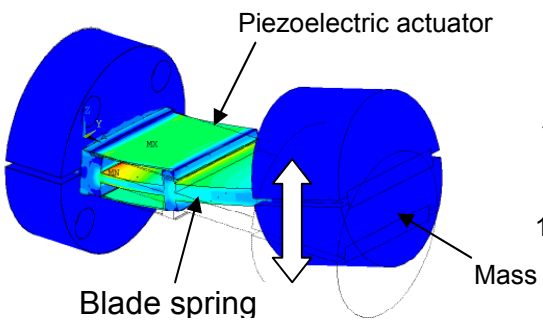

Figure 3.2 Schematic of the damper unit

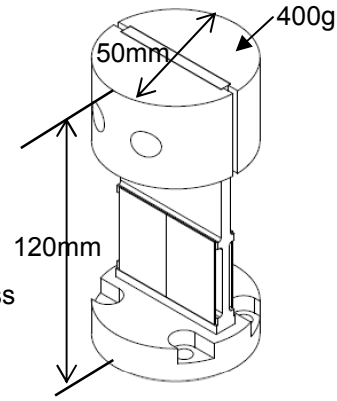

Figure 3.3 Outline dimensions of the unit

We considered that the main target of our vibration control should be the body of component (i.e. gear box) in the nacelle and the tower surface. For this purpose, we developed two prototypes of the Active Anti-Resonance Mass Damper (AARMD) . AARMD is designed so that it can be adopted to both the gear box and the tower surface. Tailored to our model experiment, outline dimensions of AARMD units were set as shown in figure 3.3. Figure 3.4 and 3.5 show the appearances of AARMD. AARMD consists of three damper units, one base plate, and one vibration sensor. While AARMD for gear box has two degrees of freedom, AARMD for the tower surface has single degrees of freedom. AARMD were controlled by a digital controller.

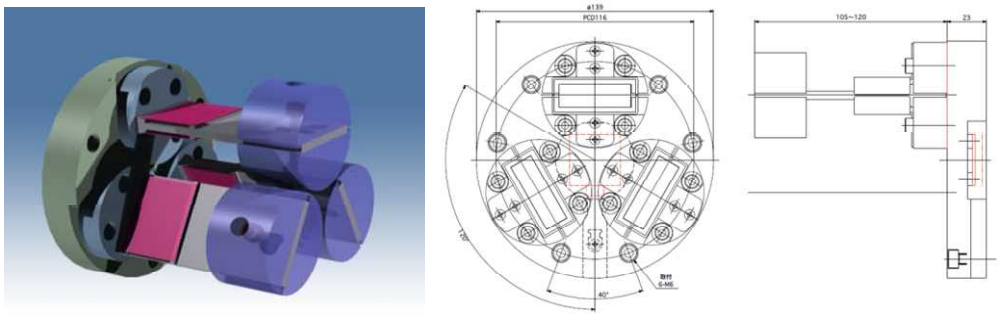

Figure 3.4 Active Anti-Resonance Mass Damper (AARMD) for the gear box

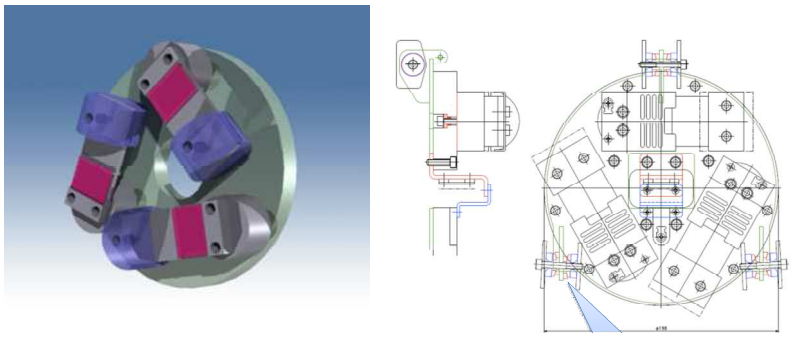

Figure 3.5 Active Anti-Resonance Mass Damper (AARMD) for the tower surface

3.3 Model experiments

1) WTG model construction

The WTG model for AARMD experiments was designed and constructed as shown in figure 3.6. To simulate actual behaviors of WTG structure, we focused on obtaining a vibration mode shape that is similar to an actual structure. Figure 3.7 shows typical mode shapes of this WTG model. A Vibration exciter to simulate excitation force was installed on the gear box model.

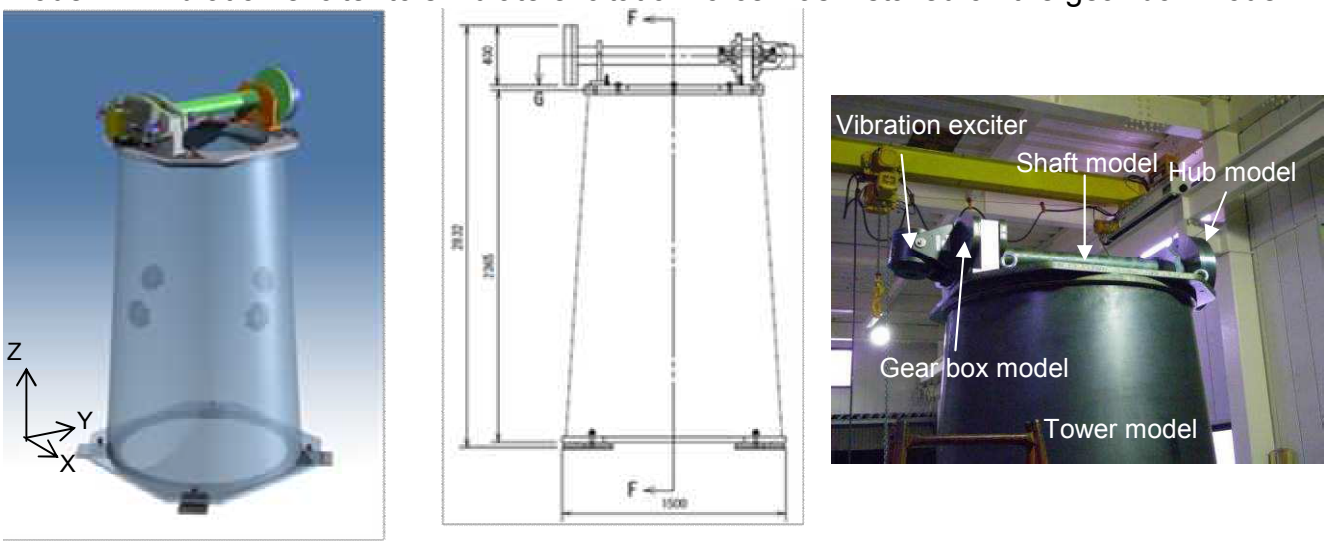

Figure 3.6 Appearance of the WTG model

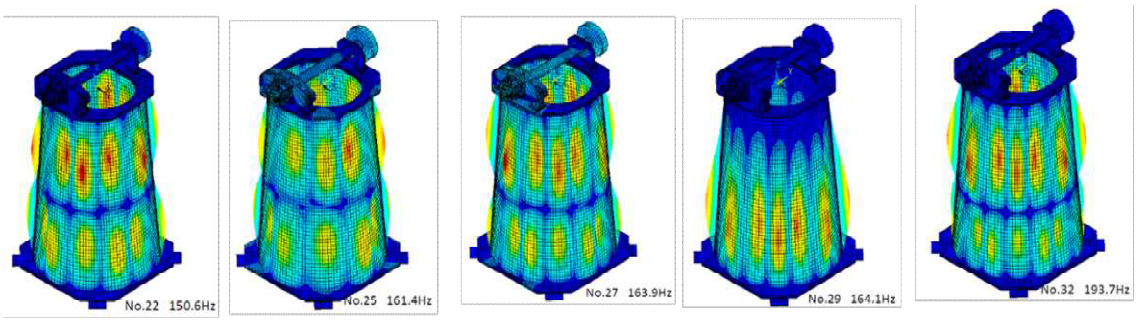

Figure 3.7 Typical vibration mode shapes of the WTG model

2) Installation of the devices and the control system

Figure 3.8 and 3.9 demonstrate installation of AARMD on the WTG model. For the gear box model, four devices were installed by fixing bolts. All devices acted in a coordinated control. Positions of devices were set to control two translation directions and one rotation direction. For the tower model, additional four devices were installed by magnets. The positions of these devices were placed at the anti-nodes of the dominant vibration modes.

Figure 3.8 Installation of AARMD for the gear box model

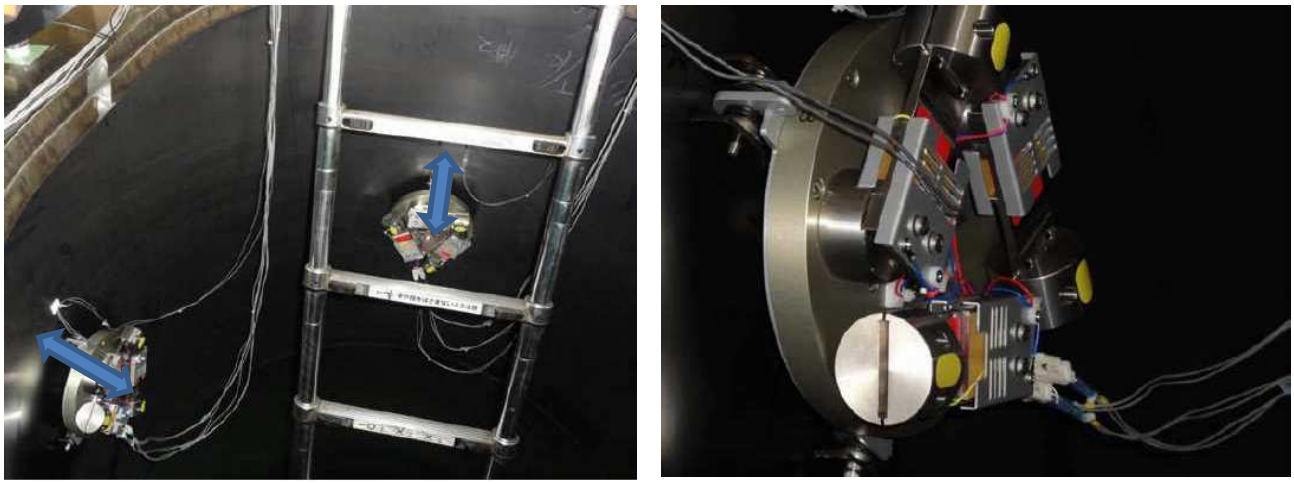

Figure 3.9 Installation of AARMD for the tower model surface

3) Measurement setup

For noise and vibration measurements, four microphones and 16 vibration pick-ups were installed. Figure 3.10 shows positions of noise and vibration sensors. All sensor signals were collected by digital data recorder simultaneously.

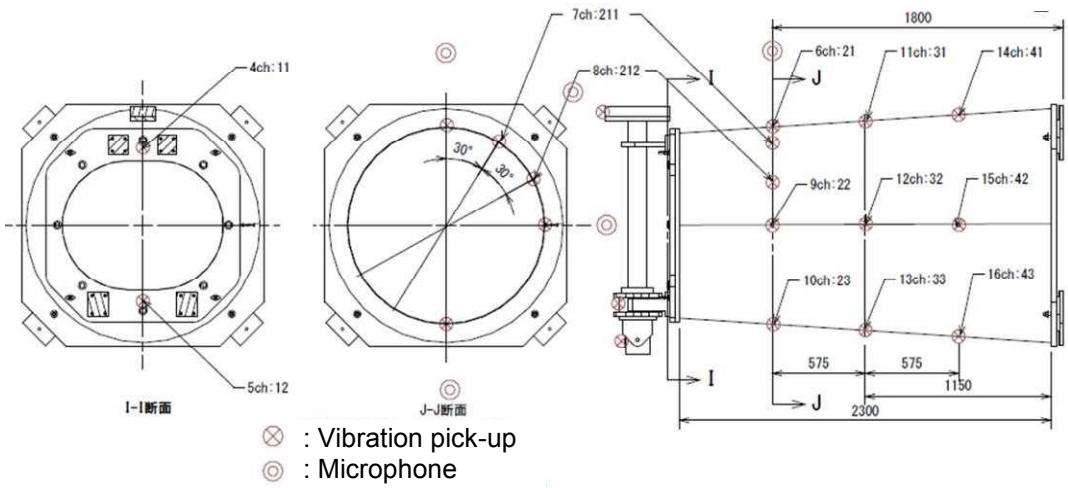

Figure 3.10 Positions of noise and vibration sensors

4) Results

To access these vibration control systems in terms of suppression performance, noise and vibration were measured under conditions of X and Z excitation directions at four excitation frequencies (140Hz, 160Hz, 180Hz and 200Hz).

Suppression of noise and vibration under the test conditions are shown in figure 3.11and 3.12. Suppression values presented in the figures are the differences (in spacial average) between conditions in control and without control.
The vibration control system worked well at several frequencies. Significant suppression of about 10dB was achieved on several conditions. Also some characteristic tendencies were observed, including unfavourable ones.
The figures indicate that the suppression values depend on excitation frequencies. One source of this trait seems to be the relation between resonant (or anti-resonant) frequencies and excitation frequencies. When the conditions of vibration excitation were close to the anti-resonant frequency, vibration control seemed to be ineffective, though the level of structure-borne sound radiation was relatively low. In contrast, when conditions come close to the resonant frequency, effective suppression was obtained, especially at 120Hz and 200Hz.
We could also observe the performance differences between the two control methods (gear box/tower surface). On the condition of Z direction excitation at 160Hz, vibration control on the tower surface was not effective, while the gear box control was effective. In this case, unsuitable positioning of the devices on the tower surface, that is, positions too close to the nodes of vibration mode, most likely were the cause of the ineffectiveness.
All in all, these model experiments using AARMD showed promising results in terms of application to an actual WTG, though with several difficulties yet to solve.
To apply it to an actual WTG, scale-up (or power uprating) of AARMD will be an important agenda. Besides, it is necessary to establish design criteria for the effective layout of the devices that can be adapted to specific vibration characteristics of actual WTG structures.

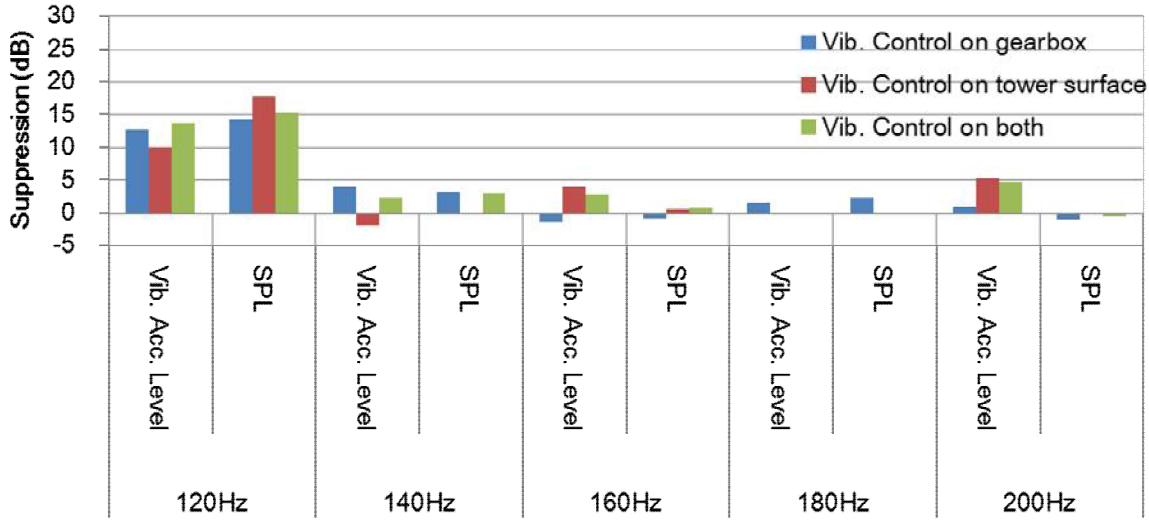

Figure 3.11 Results of suppression of noise and vibration on X direction excitation

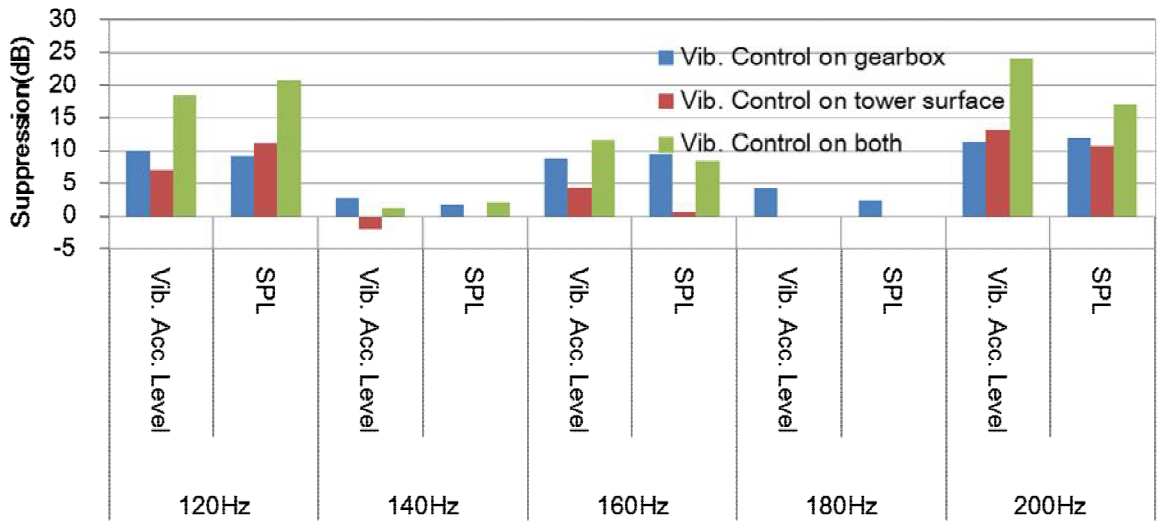

Figure 3.12 Results of suppression of noise and vibration on Z direction excitation

4. Conclusions and future assignments

Mechanical noises with tonal components can cause serious annoyance responses from wind farm community residents.
To understand mechanical noise of WTGs, we performed on-site measurements at two WTG sites where typical tonal noise had been observed before. Notably, several key characteristics were observed.

・For both of noise and vibration frequency characteristics, the peak frequencies were the same, for all the measurement positions.
・The speed-up gear mesh frequency and the observed structural vibration frequency matched exactly.
・The vibration can propagate easily from the nacelle component to the tower surface.

The mechanism of mechanical noise was accounted as follows: the vibration excited by speed-up gear propagates to the tower surface, and then produce structure-borne sound that radiates to the exterior space.
To suppress mechanical noise, we developed the Active Anti-Resonance Mass Damper (AARMD) and a control system for it.
We performed a set of model experiments using AARMD devices.
In our experiments, significant suppression of about 10dB was achieved on several conditions. Meanwhile, characteristic properties that are useful were observed, as well as unfavourable ones.
These model experiments using AARMD showed promising results in terms of application to an actual WTG, though with several difficulties yet to solve.
To apply the developed technique to an actual WTG, we are going to solve a few assignments shown below.

1) Scale-up (or power uprating) of the devices
2) Develop a design criteria, so that the devices can exert maximum performance in accordance with specific vibration characteristics of actual WTG structures
3) Verify resistance to actual environment
4) Perform test demonstration on an actual WTG

5. Acknowledgments

This research and development was a part of Wind Turbine Noise Reduction Project which was promoted by Japan's Ministry of the Environment. Also, we thank to several electricity producers for allowing us to use their WTGs.

References

[1] Wagner S., et al. (1996) *Wind Turbine Noise* Springer, 67
[2] S. Oerlemans, et al. (2009) *Reduction of wind turbine noise using optimized airfoils and trailing-edge serrations* National Aerospace Laboratory NLR Report No. NLR-TP-2009-401
[3] M. Herr (2007) *Design criteria for low-noise trailing-edge* AIAA2007-3470
[4] International Standard IEC 61400-11 Ed. 2.1(2006) : *Wind Turbine generator systems - Acoustic Noise Measurement Techniques*